AQUAMONIX
Measure. Monitor. Master.

OPERATION AND CONFIGURATION MANUAL

M500
ELECTROMAGNETIC FLOWMETER

TABLE OF CONTENTS

SAFETY AND USAGE PRECAUTIONS

- Read and understand all installation instructions contained in this Manual.
- If the equipment is used in a manner not specified by Aquamonix, the protection provided by the equipment may be impaired.
- Only suitably qualified personnel may remove any covers on this product.
- Lethal voltages may be present on conductors, wiring and on surfaces that are exposed when a cover is removed from this product.
- Be aware that the coil driver connections and associated wiring may generate voltages capable of producing an electric shock.
- Observe the required environmental conditions and recommended operating conditions for this product.
- If this product does not operate normally then refer to the troubleshooting information contained in this Manual.
- There are no operator serviceable parts inside this product. Please refer servicing and repair to qualified service personnel.

  Ensure that the flow transmitter enclosure is sealed and that the unit is stored in a dry environment if it is not to be put into service immediately. The M500 is provided with gland plugs which enable sealing when cable is not fitted, also acting as an important safety measure. Installers must fit provided gland plugs to any unsealed cable glands. A potential electrocution risk may exist if any loose object penetrates an open gland in the base.
- The flow detector may have an insulating lining that extends to the end of the tube within the flow detector or over the flange faces. Do not drag or roll the unit on its end as this may damage the liner.
- The flow detector must be installed in a position such that it remains full of liquid at all times during normal operation.
- Cabling between the flow detector and the flow transmitter should be protected from external damage and must be routed away from cables and machines that can generate significant electromagnetic interference such as variable frequency drives and electrically operated machines. The recommended technique is to install the cable between the flow transmitter and flow detector within a metallic conduit, bonded to earth and with suitable physical protection where the cable enters and exits the conduit.
- Prior to commencing installation, ensure that the flow detector and flow transmitter are stamped with serial numbers that match those listed in the calibration report. Every M500 Flowmeter is provided with a calibration report and copies may be obtained from Aquamonix if required.
- Where fitted, eye bolts should be used to lift the flow detector. If eye bolts are not fitted, slings and spreaders should be used. Be aware of the considerable weight of flowmeter components and always use safe lifting practices to avoid personal injury.
- 2060 flow detectors have an insulating liner that extends over the flange faces. This liner does not act as a gasket and pipe gaskets must be fitted during installation.

INTRODUCTION

Please note that this symbol is used to highlight aspects of particular importance with respect to the operation and safety of the instrument.

Please ensure that you are conversant with the operation, installation and precautions contained within this manual before installation or operation of the flow meter.

Principle of Operation

The operating principal of the electromagnetic flow detector is based on Faraday's law of magnetic induction that states that the voltage induced across any conductor as it moves at right angles through a magnetic field is proportional to the velocity of that conductor as depicted below:

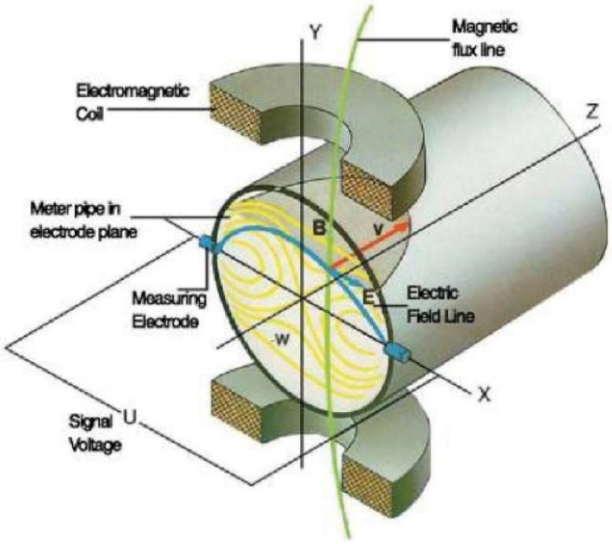

Every Aquamonix flow detector contains windings (electromagnetic coils) that produce a magnetic field when a pulsed DC current is applied from circuitry within the flow transmitter. The movement of the fluid (i.e. the conductor) through the pipe and through the magnetic field produces an electric voltage potential. The voltage is present within the fluid and is shown as electric field lines in the above figure. This resulting voltage, Es, is measured by the flow transmitter at the measuring electrodes which are directly exposed to, and in contact with the fluid.

The signal voltage, E_s, between the two electrodes is proportional to the magnetic flux density (B), the distance between the electrodes (D) and the average flow velocity (V) of the fluid.

$$E_s = B \times D \times V \times K \qquad \text{(Equation 1)}$$

Where:
E_s = induced electrode voltage
B = magnetic field strength
D = flow detector diameter
V = liquid flow velocity
K = Constant value

The flow transmitter is capable of producing an accurate and stable current source so that the magnetic flux density (B) is constant. The electrode spacing (D) is equal to the flow detector diameter and is constant due to the construction of the flow detector. Hence the induced electrode voltage, E_s is proportional to the flow velocity, V of the fluid.

Equation 1 can also be expressed to show that the signal voltage Es is proportional to the volumetric flow rate, Q_v:

$$\mathbf{Q_v = \pi \times D^2 \times V4} \qquad \text{(Equation 2)}$$

$$\mathbf{E_s = B \times D \times K \times (Q_v / (¶ \times D^2))^{0.25}} \qquad \text{(Equation 3)}$$

The application of Faraday's law for any magnetic flowmeter has a number of implications:

- The resulting voltage E_s is not dependent on the conductivity, but the material flowing through the pipe must have a certain level of conductivity for the principle to work. For water flow applications there is a minimum level of electrical conductivity (EC) below which the accuracy of the measurement will suffer. Aquamonix flow transmitters check water conductivity and can produce an alarm if the conductivity is too low.
- The material in the pipe must cover the electrodes and in most practical applications the pipe must be full at all times for accuracy of measurement. Aquamonix flowmeters include a pipe not full detector, which is an additional connection from the flow detector to the flow transmitter.
- The Aquamonix M500 Flowmeter includes electronic and digital signal processing functions to provide excellent noise reduction and signal to noise improvement.

INTRODUCTION

Model Numbering and Optional Accessories

M500 Specification Code		Details
M500-		Flow transmitter
Options Power	M L	240VAC 12-24VD C
Options Serial	X M	USB communications only (standard). Modem port (low power RS232/RS485/RS422) with MODBUS.
Analogue Outputs	X A	No analog outputs (standard). 2 x 4-20mA selectable sourcing or sinking & isolation.
Digital IO	X D	2 x multifunction outputs (standard). 1 x input, 4 x multifunction outputs.

Options Specification Code	Details
625054	Dual Analog Output Option Card
625056	Modem Interface Card (RS232/RS485/RS422) with Modbus
625057	Digital Expansion Card

Accessories Specification Code	
MAGMATE-USB	MagMate Software on USB Memory Stick
AQUAGATE	Remote Telemetry System

INTRODUCTION

Features

- Flow velocity, volume and mass flow measurement with computation and display of forward, reverse and net flow.
- Programmable peak and off-peak flow totalisation.
- Programmable year to date (YTD) flow totalisation.
- USB communications interface for ease of connection in the field to portable computers with Aquamonix MagMate software.
- Logged data download via on-board USB port.
- Automatic self-zero and common mode signal checking.
- Internal digital filtering of input signals with programmable 50/60 Hz filter response.
- On board data logging with log data storage to micro-SD card.
- Automatic calibration and advanced self diagnostic functions.
- Removable storage media (micro SD card) for portability of setup configuration, logged data and diagnostics.
- Low power operation (I series) with programmable on and off times for power management.
- Programmable high accuracy current source with fast settling time.
- Programmable alarms and status indication.
- Capacitive touch sensitive buttons for long life mechanical-free operation of keypad.
- Graphic LCD display with LED backlighting for ease of use and simultaneous display of multiple flow variables.
- Password protection for setup parameters for changes made via communications interface and from front panel interface.
- *Up to four multi-function isolated digital outputs with selectable operation: alarm/status, pulse output or frequency output*.
- *Up to two analogue outputs with programmable selection of output variable and selectable loop or local powered operation.
- *Isolated multi-function digital input provides additional control capabilities.
- Simulation mode for quick diagnosis and training
- Integral self test.
- *MODBUS communications interface with selection of communications parameters including RTU or ASCII mode, 2 wire or 4 wire interface.
- *Modem compatible serial interface for remote sites.
- Wake command function allows polling by third-party systems via Modbus interface.
- Worldwide EMC Compliance.

*Note

An option card may be required to provide feature.

INTRODUCTION

Electrical Characteristics

Flow Transmitter	
Digital Outputs: Type Switching Capacity Rated Contact Voltage Rated Contact Current	 Opto-isolated open collector NPN 3 Watts DC 30 Volts DC 100 milliamps DC
Digital Input: Operating voltage range	 0 to 30 Volts DC
Analog Outputs: Maximum loop resistance Nominal circuit voltage Over range indication	 500 Ω 24 Volts DC 22 milliamps DC
Signal Measurement: Resolution Linearity Sampling Rate Isolation Input Range	 23 bits ±0.001 % 2000 samples per second Approximately 30 Volts DC. ±13 millivolts DC
Fusing	Internal Fuse Type: T2A. Ensure power is disconnected before disconnecting or reconnecting the fuse.
Coil Drive Circuit: Resolution Current Output Range Voltage Range Switching Frequency Range Settling Time (typical)[1] Coil resistance range	 16 bits 100 to 200 milliamps DC 0 to ±36 Volts DC 0.0033 to 16 pulses per second. Less than 5 milliseconds 25 to 120 Ω

Notes:

1. Actual value depends on process conditions.
2. Dependent on daylight conditions, coil current and measurement duty cycle.

Notice relating to Coil Current:
Maximum reliable coil current for the 500 series transmitter is 200mA

Flow Detector	
Coil Resistance EM Series IR Series	Typical value in ohms: 35-65 65-120

INTRODUCTION

Flow Measurement Characteristics

Flow velocity range:	0.01 to 10.00 metres per second
Turndown ratio:	1000:1
Linearity:	<0.005%
Repeatability:	<0.05%
Accuracy:	Better than ±0.5% of flow or ±1mm per second whichever is greater.
Temperature stability:	<0.05% over temperature range
Noise filtering:	Analog bandpass rejection filter Digital slope compensation filter Digital noise reduction filter (50/60 Hz).
Full scale flow rate:	Programmable
Low flow cut-off:	Programmable from 0 to 10% of full scale flow rate. Totalisers are not updated when flow is below the low cut-off value
Measurement on-time:	Programmable from 3 to 3600 seconds
Measurement off-time:	Programmable from 0 to 3600 seconds
Low flow off-time:	Programmable from 0 to 30000 seconds
Flow channels:	Flow velocity Volumetric flow rate Mass flow
Totalised channels:	Total volumetric flow Total volumetric flow in forward flow direction Total volumetric flow in reverse flow direction Total volumetric flow during peak hours Total volumetric flow in forward direction during peak hours Total volumetric flow in forward direction during off-peak hours Year to date total volume Year to date total volume in forward direction Year to date total volume in reverse direction
Flow and Totaliser Volume units:	Programmable selection: • Litres, kilolitres, or mega litres, • Cubic feet, Acre feet. • Imperial Gallons, Imperial mega-gallons, • US Gallons, US mega-gallons, • User programmable unit conversion factor.
Flow time units:	Programmable selection: • Seconds, Minutes, Hours, Days, • User programmable unit conversion factor.
Flow simulation mode 1:	When enabled the user can enter a value for the flow rate, all outputs and rate calculations are set according to the simulation value. The coil driver outputs continue to operate. The totalisers do not update.
Flow simulation mode 2:	Performs same function as mode 1 but with the coil drive output current fixed at a constant DC value.

INTRODUCTION

Display and Keypad Characteristics

Graphic LCD Type:	128 x 64 pixel monochrome graphic type with LED backlighting.
Backlight operation:	Can be enabled or disabled, includes auto-off mode when enabled and after 30 seconds of keypad inactivity.
Keypad:	Four button capacitive touch with adjacent key suppression, self calibrating, with wake function and press or hold discrimination.
Data update rate:	Approximately 1 Hertz.
Display characters:	Customised character sets (three styles) plus Icons, international character and language capability.
Password access:	Single level access to detailed data displays and configuration settings. No password required to view flow rates and totals.
Configuration menu:	Two-level hierarchy: menu and submenu with numerical index to each menu item for ease of cross referencing.
Meter Identification	Programmable meter code

Digital IO Functional Characteristics

Digital Output Mode:	Digital outputs can be individually programmed for : • Alarm output (activated by an alarm condition – see below) • Frequency output (proportional to flow rate channel value) • Pulse output (one pulse generated for a specified volume)
Alarm Output Mode:	Programmable alarm cause: • Low battery voltage • Pipe not full • System fault • Low flow • High flow • Forward flow detected • Reverse flow detected • Analog output 1 over-range • Analog output 2 over-range
Frequency Output Mode: • Resolution • Range • Duty Cycle	 1 Hertz 4 to 1000 Hz 50 %
Pulse Output Mode: • Volume per pulse • Maximum Rate • Pulse Width	 Programmable: 1 to 1000 flow units. 20 Hertz Programmable 20 to 200 ms
Digital IO Scan Rate	Approximately 1 Hertz

INTRODUCTION

Analog Output Functional Characteristics

Analog output mode:	Analog outputs can be individually configured for : • Forward or reverse acting • Sinking or current sourcing
Output scaling:	0 to 100% of programmed full-scale flow rate
Output update rate:	Approximately 1 Hertz

Ancillary Hardware Functional Characteristics

Power On Self Test	The following tests are performed during power on: • ADC – Analog to Digital Converter test • ESN – Electronic Serial Number test • CRC – CRC Data validation of Configuration data • DAT – SD Card format and file system verification • RTC – Real Time Clock test • PSU – Power supply voltages test • CIV – Coil Current and Voltage test
Internal temperature monitor.	An internal temperature monitor is used to record the temperature within the flow transmitter and the temperature is logged to the SD card.
Internal clock/calendar	High accuracy real time clock circuit with long life battery backup • 1 second resolution • Integral calendar functions • Alarm function, used to schedule internal data logger.
Non-volatile memory	Semiconductor non-volatile memory circuits for storage of: • Factory calibration data • Meter calibration and configuration data • Totaliser values • Diagnostic information. • CRC16 checksum validation for all non-volatile data
Electronic Serial Number	A unique electronic serial number is stored in silicon for each flow transmitter.
Onboard Solar Regulator	Battery voltage, battery current and solar voltage are routinely monitored. Battery charging is enabled by connection of the solar panel through a series diode to the battery when solar voltage exceeds battery voltage by 4.0 volts. The solar panel is disconnected when battery voltage exceeds 14.8 volts to prevent overcharging.

INTRODUCTION

Diagnostic Functions Characteristics

Scan Interval	Programmable: to a multiple (1 to 20) of the data logging interval
Diagnostic Checking	Diagnostic checks are routinely performed to ensure correct operation of the flow meter. These checks may be used to generate alarms and may also prevent the totals from being updated with erroneous values. • Coil voltage check • Coil current check • Electrode check • Pipe Not Full detection • Signal voltage check
Additional System checks	• Configuration and calibration data integrity • A/D Converter operation and self calibration • Real Time Clock operation

On-board Data Logger Functional Characteristics

Logging interval:	Programmable from 1 minute to 12 hours
Log data storage:	Removable micro-SD card, formatted for FAT (FAT16) allowing files to be read and copied when the card is inserted into a personal computer.
File system:	PC Compatible directory structure with individual files for: • Flow data records (CSV) • Diagnostic results records (CSV) • System event records (CSV) • Alarms records (CSV) • Configuration data (binary format)

*Comma Separated Volume file, suitable for import into spreadsheet applications.

Communications Functional Characteristics

USB Protocol	Proprietary packet-based command and file transfer protocol.
Serial Port Command Protocol	Selectable: MODBUS RTU or MODBUS ASCII
Serial Port File Transfer Protocol	Proprietary packet-based command and file transfer protocol.
Serial Port Baud Rate:	Selectable: 9600, 19200 or 38400
Serial Port Line Settings:	No parity, 8 data bits, 1 stop bit (N,8,1).
Supported MODBUS function codes:	03 – Read Holding Registers 06 – Write Single Register 16 – Write Multiple Registers

INTRODUCTION

Physical and Environmental Characteristics

M500 Flow Transmitter	
Enclosure Construction:	Pressure Die Cast Aluminium
Cable Entries	1xM25 Gland, 1xM20 Gland, 3xM16 Gland.
Weight:	
Overall Dimensions:	273H x 115D x 182W
Ambient temperature:	-10 to 55° C

Flow Detector	
Housing Construction:	IR2060 - Mild steel with 2 part epoxy coating
	IRIR2030 - 304 stainless steel
	IR2020 - ABS
Ambient temperature:	-10 to 55° C
Protection Class	IP68 to 5 metres (IR2020 IP68 to 1.5 metres)
Electrodes	316 Stainless Steel (Standard)
Lining:	IR2060 - insulation rubber (Standard)
	IR2030 - insulation rubber
	IR2020 - ABS
Submergibility:	IR2060 – 10 metres
	IR2020 – 1.5 metres

Connecting Cables	
Signal Cable	4x16/0.2 BRAIDED SCREEN
Pipe not Full cable	4x16/0.2 BRAIDED SCREEN
Coil Driver Cable	1.5mm TWIN & EARTH ORANGE CIRCULAR
Power Cable	1.0mm Rubberised

INTRODUCTION

M500 Flow Transmitter Casing Dimensions

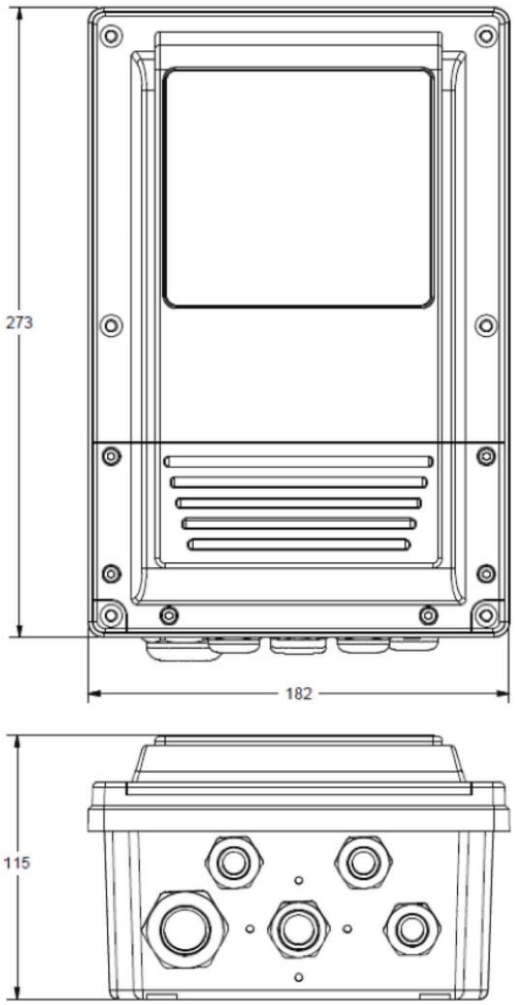

Note: Drawings not to scale.

Quality Assurance & Traceability

Quality System Assurance:

This product is manufactured under a quality system certified as complying with ISO 9001:2008.

Statement of Traceability:

Master Calibration equipment is certified in accordance with Regulation 13 of the National Measurement Regulations 1999, Certificate No 34384854801260.

NATA Certification

The Aquamonix flow meter manufacturing facility has NATA certification to an accuracy of +/-0.18% for calibration and testing of flow meters in the size range 50mm to 200mm diameter. NATA certification provides independent confirmation of the accuracy of the manufacturing plant and test flow facilities and is a further step closer to full Pattern Approval for the Australian made Aquamonix Magnetic Flow Meters.

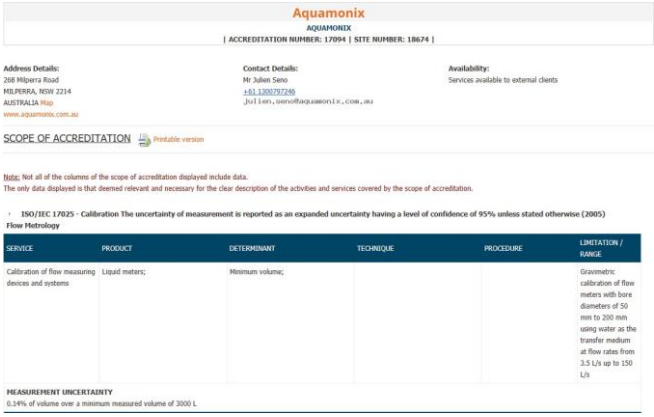

Aquamonix

AQUAMONIX

| ACCREDITATION NUMBER: 17094 | SITE NUMBER: 18674 |

Address Details:
268 Milperra Road
MILPERRA, NSW 2214
AUSTRALIA Map
www.aquamonix.com.au

Contact Details:
Mr Julian Seno
+61 1300797246
julian.seno@aquamonix.com.au

Availability:
Services available to external clients

SCOPE OF ACCREDITATION Printable version

Note: Not all of the columns of the scope of accreditation displayed include data.
The only data displayed is that deemed relevant and necessary for the clear description of the activities and services covered by the scope of accreditation.

› **ISO/IEC 17025 - Calibration The uncertainty of measurement is reported as an expanded uncertainty having a level of confidence of 95% unless stated otherwise (2005)**
Flow Metrology

SERVICE	PRODUCT	DETERMINANT	TECHNIQUE	PROCEDURE	LIMITATION / RANGE
Calibration of flow measuring devices and systems	Liquid meters;	Minimum volume;			Gravimetric calibration of flow meters with bore diameters of 50 mm to 200 mm using water as the transfer medium at flow rates from 3.5 L/s up to 150 L/s

MEASUREMENT UNCERTAINTY
0.14% of volume over a minimum measured volume of 3000 L

INTRODUCTION

2060 Flow Detector Dimensions

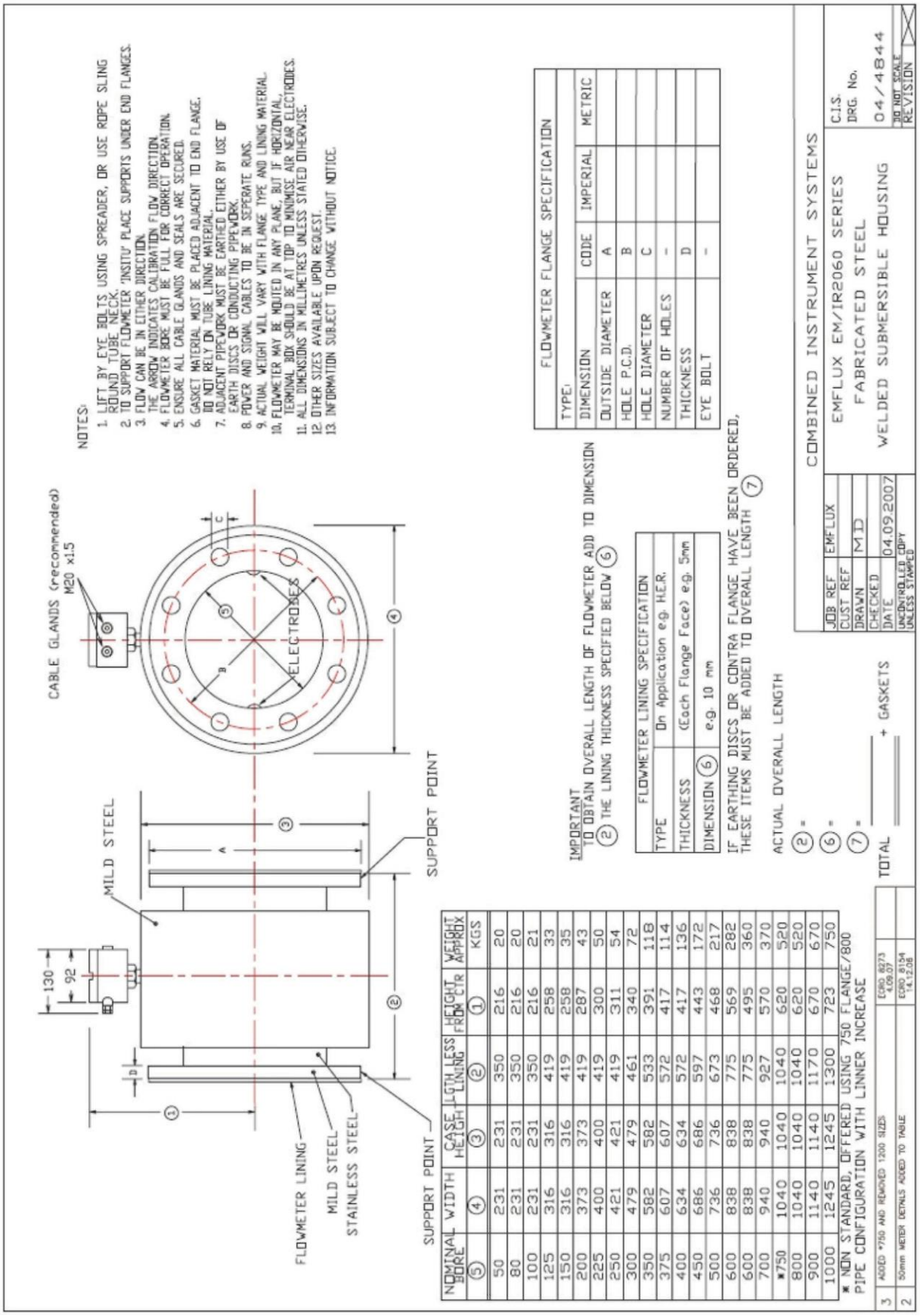

NOMINAL BORE (5)	WIDTH (4)	CASE HEIGHT (3)	LGTH LESS LINING (2)	HEIGHT FROM CTR (1)	WEIGHT APPROX KGS
50	231	231	350	216	20
80	231	231	350	216	20
100	231	231	350	216	21
125	316	316	419	258	33
150	316	316	419	258	35
200	373	373	419	287	43
225	400	400	419	300	50
250	421	421	419	311	54
300	479	479	461	340	72
350	582	582	533	391	118
375	607	607	572	417	114
400	634	634	572	417	136
450	686	686	597	443	172
500	736	736	673	468	217
600	838	838	775	569	282
600	838	838	775	495	360
700	940	940	927	570	370
*750	1040	1040	1040	620	520
800	1040	1040	1040	620	520
900	1140	1140	1170	670	670
1000	1245	1245	1300	723	750

INTRODUCTION

2020 Flow Detector Dimensions

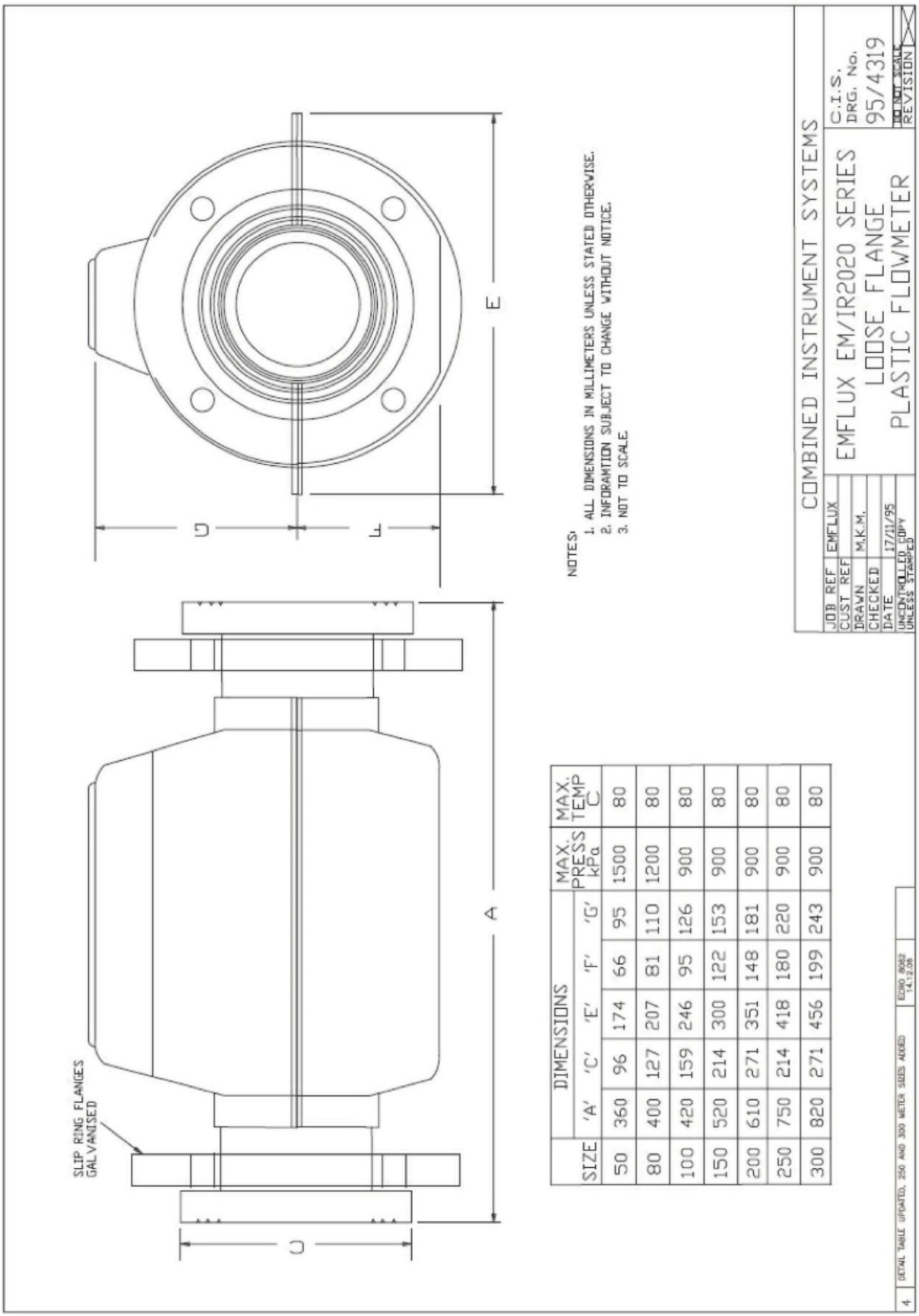

SIZE	DIMENSIONS 'A'	'C'	'E'	'F'	'G'	MAX. PRESS kPa	MAX. TEMP C
50	360	96	174	66	95	1500	80
80	400	127	207	81	110	1200	80
100	420	159	246	95	126	900	80
150	520	214	300	122	153	900	80
200	610	271	351	148	181	900	80
250	750	214	418	180	220	900	80
300	820	271	456	199	243	900	80

GENERAL DESCRIPTION

A 500 Series Electromagnetic flowmeter consists of an electronic flow transmitter, an electromagnetic flow detector, and interconnecting cables.

Mains-powered flowmeters are pre-wired with AC power cable with internal AC-DC conversion. The electronic circuit board and optional equipment cards are mounted inside a powder coated die-cast aluminium casing.

The flow transmitter mounts on a 50mm diameter pole normally placed within 10 metres of the flow detector. Longer distances are possible but must be specified at time of ordering. The limitation is a maximum cable length of 100 metres.

2020 Flow Detector

2060 Flow Detector

Nameplate

A polyester label is fixed to the outside case of each meter. This contains information such as type number, size and calibration information.

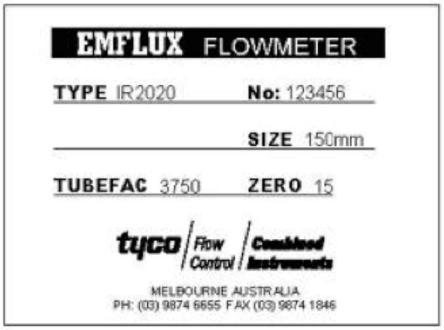

In the case of the 2020, a duplicate label is inserted inside the junction box. This will allow the details of the unit to be traced and/or retrieved in the event that the label is rendered illegible after prolonged burial.

2060 flow detectors have identifying numbers stamped on one flange that allows full factory information to be retrieved. Simply call the factory or your nearest Aquamonix representative and provide them with this number.

Explanation of label information

Type:
Abbreviated model number for the flow detector. May be either IR2020, EM2020, IR2060 or EM2060.

No.:
Unique serial number for the flow detector.

Size:
Nominal pipeline size for the flowmeter.

Tubefac:
A calibration factor established by flow testing the flowmeter system in the flow laboratory at the factory in Australia. This factor is entered into configuration parameter of the 500 series flow transmitter connected to the flow detector for the system to be accurate. For your convenience, on a new installation, this parameter has normally been entered into the flow transmitter prior to the system leaving the factory. It is recommended that the calibration report form for the flow detector and flow transmitter be checked to ascertain the mating serial numbers prior to installation.

Zero:
A calibration factor established by flow testing the flowmeter system at the factory in Australia. This factor is entered into configuration parameter of the 500 series flow transmitter connected to the flow detector for the system to be accurate. For your convenience, on a new installation, this parameter has normally been entered into the flow transmitter prior to the system leaving the factory. It is recommended that the calibration report form (see sample below) for the flow detector and flow transmitter be checked to ascertain the mating serial numbers prior to installation.

GENERAL DESCRIPTION

Calibration Certificate

A wet Test Calibration certificate is issued with every flow meter. It records serial numbers, configuration settings and calibration parameters and confirms operational performance accuracy within specifications.

AQUAMONIX
Measure. Monitor. Master.

HEAD OFFICE
268 Milperra Road,
Milperra NSW 2214
AUSTRALIA
Ph: +61 2 9792 0201
Fax: +61 2 9771 5380

Emflux Flowmeter System Flow Test Certificate

Customer Name:

Customer Order No: **Sales Order No:**

PRIMARY ELEMENT DATA	
Detector Head Model No:	Serial No:
Nominal Bore:	ADC Reference:
Flow Tube Zero:	Flow Tube Factor:
Field Coil Resistance:	Field Coil Current:
SECONDARY DATA	
Flow Transmitter Model No:	Serial No:
Supply Voltage:	Supply Frequency:

FLOW TEST RESULTS			
ACTUAL VOLUME Litres	INDICATED VOLUME Litres	METER FLOW RATE L/S	% ERROR

Tested By: **Date:**

This Product has been manufactured under a quality system certified as complying with ISO9001:2000.

GENERAL DESCRIPTION

Electronic Configuration "Fingerprint"

A full electronic record of the full configuration setting for each transmitter is recorded during the calibration process. This "electronic fingerprint" can be used to confirm correct configuration of the transmitter, and can be ustilised for the ongoing verification and validation of meter operational performance.

General Information	
Flowmeter Serial Number	00000405A154
Modbus ID (address)	1
Meter ID	33391
Site ID	0
Flowmeter Main Frequency	50 Hertz
Empty Pipe detection	Enable
PNF threshold	0.15
Firmware version	AL29
Number of power reset	8
Pipe Information	
Pipe diameter	200
Pipe size unit	milimetres
Coil Information	
Coil Current	100 mA
Coil frequency	8 Hz
Coil/sampling Power OnTime	30 seconds
Coil/sampling Power OffTime	300 seconds
Diagnostic rate	3
Flow Related Data	
Simulation mode	OFF
Simulated flow rate value (only in Simulation Mode)	9 l/s
Fail Safe Mode Low	Enable
EC threshold value	0.1
Zero Flow cutt-off	30
Zero Flow Off-time	300 second(s)
Low Flow CutOff	50 mm/s
Smoothing constant	50
Flow Full Scale	150
Density	1 kg/cmÂ³
Flow tube zero	-3
Flow tube factor 1	3555
Tube flow changeover from factor 1 to 2	0
Flow tube factor 2	4000
Tube flow changeover from factor 2 to 3	0
Flow tube factor 3	4000
Tube flow changeover from factor 3 to 4	0
Flow tube factor 4	4000
Flow Volume Unit	L
Flow Time Unit	second
Flow Volume Special Factor	1
Flow Time Special Factor	1
Totaliser Special Factor	1
LCD settings	
LCD Backlight time	10 seconds
LCD Screen timeout	60 seconds
LCD Contrast	40
4-20mA DAC on Option board	
Offset for DAC 0	0
Span for DAC 0	0
Offset for DAC 1	0
Span for DAC 1	0
Logging Information	
Log Period	180 seconds
Number of flow measurement scans per diagnostics	3

Totaliser Information	
OffPeak Start time	23:00:00
OffPeak Stop time	7:00:00
End of year Latch Date	1-Jul
Totaliser Units	M3
Alarm Information	
Alarm 1	
Record On Alarm	Disable
Alarm cause	Low_Battery
Alarm 2	
Record On Alarm	Disable
Alarm cause	Pipe_not_Full
Alarm 3	
Record On Alarm	Disable
Alarm cause	System_Fault
Alarm 4	
Record On Alarm	Disable
Alarm cause	Alarm_Disabled
Analog output data	
Analog output 1	
AO Enabled	0
Input channel	Velocity
Damping	5sec
Calibration factor for Zero output	0
Calibration factor for Span output	100
Analog output 2	
AO Enabled	0
Input channel	Velocity
Damping	5sec
Calibration factor for Zero output	0
Calibration factor for Span output	100
Digital output data	
Digital output 1	
Output type	FREQUENCY
Trigger on output	Flow_Rate
Scaling factor applied to Frequency	1000
Scaling factor applied to Pulse	100
Pulse Width	20
Digital output 2	
Output type	PULSE
Trigger on output	CombinedTotal
Scaling factor applied to Frequency	1000
Scaling factor applied to Pulse	100
Pulse Width	20
Digital output 3	
Output type	OFF
Trigger on output	Velocity
Scaling factor applied to Frequency	1000
Scaling factor applied to Pulse	100
Pulse Width	20
Digital output 4	
Output type	OFF
Trigger on output	Velocity
Scaling factor applied to Frequency	1000
Scaling factor applied to Pulse	100

FLOW DETECTOR INSTALLATION

Flow Detector Installation

Flow Detector Installation Precautions

- Do not drag or roll the flow detector on its end as this may damage the liner or flange mounting surfaces.
- The flow detector must be installed so that it remains full of liquid at all times during normal operation. There are also further requirements for the arrangement of pipe-work required for installation as detailed in the following section "Pipe Location and Arrangement".
- Be aware of the need to provide proper earthing bonds and to fit earthing rings to the pipe-work to ensure proper operation. This is described in the following section.
- Check the flow detector and flow transmitter are marked with the correct serial numbers as given in the calibration report supplied with the flowmeter. For buried flow detectors, record all details listed on the flow detector prior to burial.
- Where fitted, eye bolts should be used to lift the meter. If eye bolts are not fitted, slings and spreaders should be used.
- 2060 flow detectors have an insulating liner that extends over the flange faces. The liner does not act as a gasket. Pipe flange gaskets must be fitted between the flowmeter lining and the adjacent pipework.
- Gaskets will also be required for 2020 style flow detectors when fitted with flanges.
- 2020 flow detectors may be supplied with spigot connections on one or both ends, which are intended for installation using Gibault style connectors or solvent welded to ABS pipe. If using Gibault connectors prior to installation check that the outside diameter of the pipework matches the outside diameter of the 2020 ends so that the Gibault connector can be properly fitted (refer Gibault manufacturer's specification for maximum allowable variation).

Pipe Location and Arrangement

The following recommendations are provided as a guide only. It is common for government authorities and private institutions to have mandatory requirements and procedures for installation of electromagnetic flowmeters.

The following points must be followed to ensure proper operation of the flowmeter:

- The flow detector may be installed at any angle but it is extremely important to ensure that it is completely filled with liquid when a flow measurement is required.
- Particular care should be taken to ensure that entrained air cannot accumulate in the flowmeter or be swept through it from surrounding pipe-work. This will adversely affect the ability of the flowmeter to obtain a proper measurement.
- The flowmeter can distinguish between forward and reverse flows. Each flow detector is fitted with an arrow indicating the normal forward flow direction for the installation.
- Electromagnetic flowmeters require that the fluid is as free from turbulence as possible within the flow detector. Accordingly it is necessary to locate the flow detector within straight sections of pipework. Recommended practice is to ensure that the sections of straight pipe are at least five times the internal pipe diameter from the flow detector.
- For flow metering applications where the flow detector is required to measure both forward and reverse flow the 5 times rule should be obeyed for both the upstream and the downstream pipe sections. For forward measurement only the length of the downstream pipe can be reduced to 3 times the pipe internal diameter.
- Where pipe reducers are used to fit the flow detector to a pipe with a different diameter, steep tapers of greater than 8o should be avoided and the reducers should be located as far away from the flow detector as possible.
- The flow detector has a removable cover for access to internal wiring connections. The flow detector must be located so that the cover is accessible and easily removed for installation of cabling and associated conduit.

FLOW DETECTOR INSTALLATION

- 2020 and 2060 flow detectors are suitable for direct burial of the flow detector. Be certain that their location is suitably marked or noted to avoid damage due to subsequent digging or trenching operations.
- 2020 and 2060 flow detectors may also be submerged under water if required (2060 maximum depth 10 metres, 2020 maximum depth 1.5 metres).

The following figures depict the requirements for flow detector installation.

Mount the flow detector within straight lengths of pipes to ensure accurate flow measurement.

The length of pipes must provide a minimum distance between the flow detector electrodes and pipe bends, pumps, valves or other items that may cause the water flow to be disturbed.

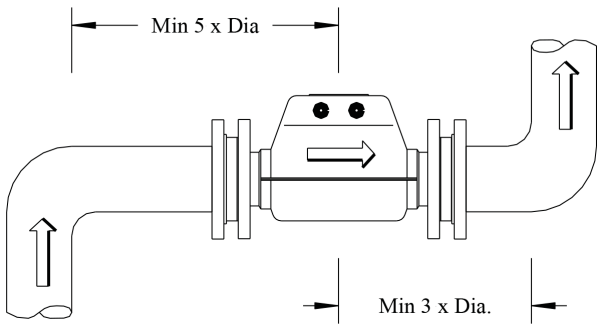

Locate within Straight Sections of Pipe

The lengths of straight pipe sections must be:

- A minimum of 5 times the flow detector diameter from the electrodes for the pipe feeding the flow detector (ie upstream).
- A minimum of 5 times the flow detector diameter for the downstream pipe for reverse flow measurement applications.
- A minimum of 3 times the flow detector diameter for the downstream pipe where the application does not involve reverse flow measurement.

The flow detector may be mounted vertically. In this case it is essential that the water flow is in the upwards direction to ensure that the pipe remains full of liquid.

Mount the flow detector vertically for applications where the liquid can contain sediment, sand or other particles. This will help to reduce wear on the flow detector lining surfaces and electrodes.

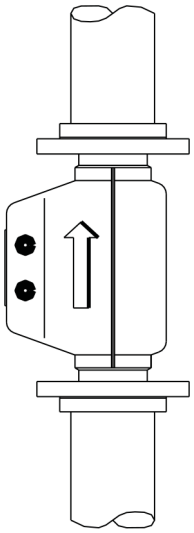

Locate within Straight Sections of Pipe

The flow detector must remain completely full of liquid for accurate flow measurement. In sections of pipe as shown in this example located the flow detector in the position as shown. Do not mount the flow detector in the top (horizontal) or in the vertical section where flow is downwards.

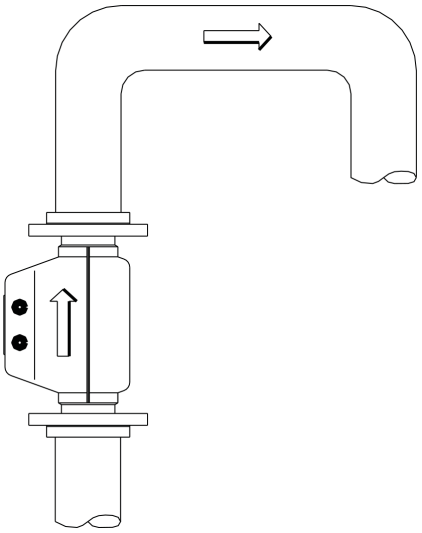

Ensure the Pipe Remains Completely Full of Liquid

FLOW DETECTOR INSTALLATION

The flow detector can be fitted within inclined sections of pipes, with the conditions noted above:

- Must be fitted within straight sections of pipes of minimum lengths.
- The pipe must be completely full of water at the flow detector – it is preferable to locate the flow detector at the lowest point in the incline.
- The flow detector must be mounted with a tilt of less than 20 degrees to vertical.

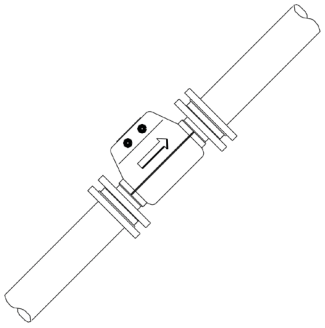

Mounting within Inclined Pipes

Fit the flow detector within a section of pipe that is lower than the surrounding pipework for pipes that are known to run partially filled.

Caution: this may lead to problems where the pipe carries liquids containing particulate matter.

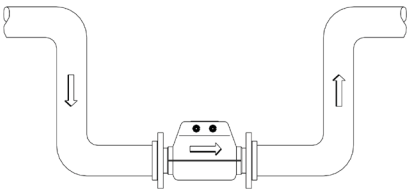

Use a U Section When Pipe is Partially Full

Flow metering accuracy can be improved by fitting the flow detector between flow area reducers.

Caution: The reducers will cause unwanted turbulence and affect measurement performance if the angle of the tube is greater than 8O to the horizontal.

Caution: Installing reducers will cause pressure drop in the line.

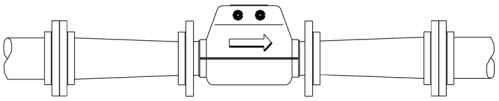

Other Pipe Layout Requirements & Standards

Note – There may be State or National Metering Standards that may impose different requirements on the straight pipe requirements. Guidance should be sought from relevant state agency or by reference to National Metering Installation Guidelines.

Flange faces of adjoining pipework must be aligned and parallel within reasonable limits. Excessive misalignment could result in leakage from the flange or place undue stress on the structure of the flow tube, resulting in internal water leakage and failure of the meter.

Design allowance for structural slippage in pipe-supporting framework can reduce severity of longitudinal stresses.

These longitudinal stresses are often imparted through thermal variation in the pipework and / or 'pulling together' of the pipework by the flange bolts, during installation of the meter.

Installation of a meter in fixed pipework can cause damage to the meter if there is not sufficient slippage or capacity to accommodate gaps.

Bolts should be tightened in an opposite pattern.

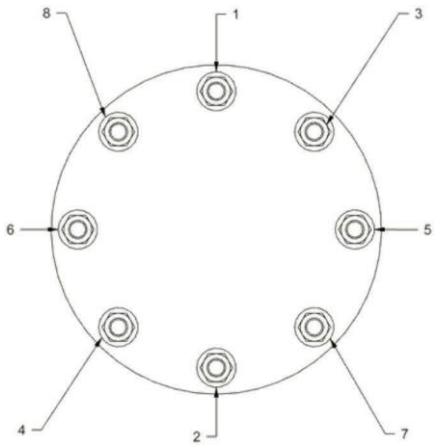

FLOW DETECTOR INSTALLATION

Electrical Installation of Flow Detector

The electrical wiring and connections at the flow detector include:

- Electrodes – there are three electrode connections, two measurement electrodes and one pipe not full detection electrode.
- Coils – two connections are provided to drive the coils that produce the magnetic field within the flow detector.
- Signal ground – depending on the model of flow detector, there are two or three connection points for ground reference between the flow detector and flow transmitter.
- Earthing - for correct operation it is essential for the following liquid to be earthed at both ends of the flow detector. Recommended earthing also includes connection to an earth stake located near the flow detector.

The connections between the Flow Detector and the Flow Transmitter usually require three individual cables: a signal cable and cables for the coil drive and pipe not full signal.

Signal Cable Connection

For proper operation and to enable full specified accuracy of the flowmeter the following signal connections must be made at the flow detector.

The connection arrangements for two styles of cables are shown in the diagram below:

Communications Functional Characteristics

Connection	Signal	Notes
Electrode (+)	Flow voltage positive	Proper operation requires these millivolt signals to be as noise-free as possible.
Electrode (-)	Flow voltage negative	
Guard (+)	Signal guard driver positive	Do not connect at Flow Detector
Guard (-)	Signal guard driver negative	
Inner Shield	Cable shield wire (drain wire)	Ground connection between Flow Detector and Flow Transmitter
Outer Shield	Overall cable shield	Connect to earth bond at Flow Detector

Pipe Not Full (PNF) Cable Connection

For flow detectors with a PNF electrode the following signal connections must be made at the flow detector.

Communications Functional Characteristics

Connection	Signal	Notes
PNF Electrode	Pipe not full	Proper operation requires this millivolt signal to be as noise-free as possible.
Outer Shield	Overall cable shield	Connect to earth bond at Flow Detector

FLOW DETECTOR INSTALLATION

Coil Drive Cable Connection

Connection	Signal	Notes
Outer Shield	Overall cable shield	Connect to earth bond at Flow Detector
Coil A	Coil drive A	Provides coil drive to Flow Detector.
Coil B	Coil drive B	

Earthing

For correct operation it is essential for the flowing liquid to be earthed at both ends of the flow detector. If the adjacent pipework does not contain an electrically insulating lining and is in good electrical contact with the liquid then the adjacent pipes can be used for the earth connection.

Earth straps should be connected between the pipework flanges and the flowmeter flanges particularly when flexible self sealing couplings are used. Flange bolts do not always provide good electrical earth connections between metallic flanges.

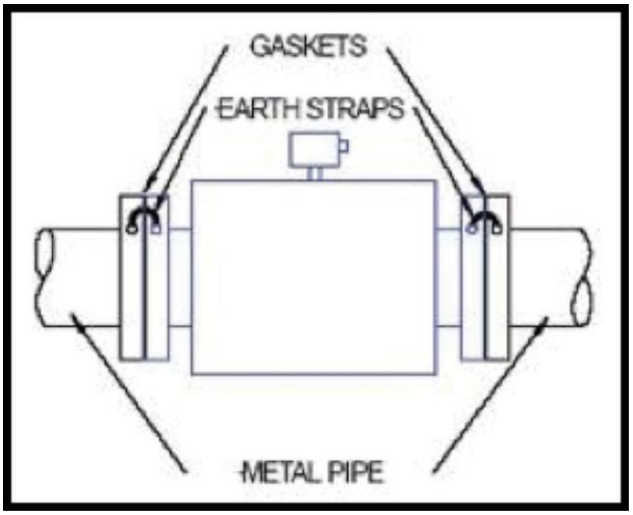

If adjacent pipework is not electrically conducting or is lined with an electrically insulating material, then earth rings or earth electrodes must be used. These earth rings must be strapped to the flow detector flanges at both ends of the flow detector. Earth rings must be installed with a gasket either side.

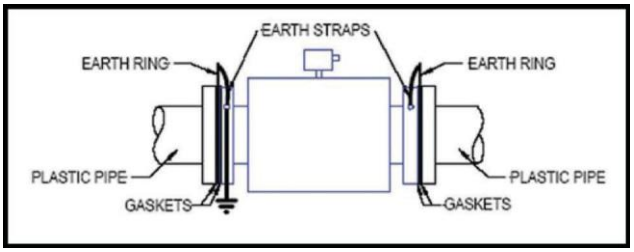

Some flow detectors have an internal lining that extends over the flange faces. The lining material does NOT form a gasket. When installing the flow detector, gaskets must be provided between the flowmeter lining and the adjacent pipe flanges.

2020 Flow detectors have a reference electrode eliminating the requirement for earth rings in non conductive pipes.

FLOW DETECTOR INSTALLATION

Flow Transmitter Installation

Flow Transmitter Installation Precautions

- Observe the recommended operating conditions for the flow transmitter (refer to Specifications), including the specified maximum cable distance between the flow detector and flow transmitter.
- Do not position the transmitter so that it is difficult to operate the electrical disconnect device. Ensure that the power switch is accessible to personnel.
- Cables between the flow detector and flow transmitter should be run in metal conduit for mechanical protection and noise minimisation. Recommended practice is to earth the conduit which should be run up the inside of the flow transmitter mounting post.
- Flow transmitters should be located in a shaded position to minimise heating and effects of sunlight.
- Position the transmitter at a height that provides convenience of reading the display and operating the keypad.
- Separate conduits are needed for coil supply, signal and accessories. Refer to Part C - Mechanical Installation of Flow transmitter for details.
- Ensure the electrical power supply for the M500 is adequately earthed.

Electrical Installation – M500

Electrical installation should be carried out by suitably qualified personnel and should conform to local codes and wiring practices.

To access the electrical connections open the small lid with allen keys. Do not attempt to connect or disconnect the AC wiring unless appropriately qualified to connect and disconnect.

Flow Detector

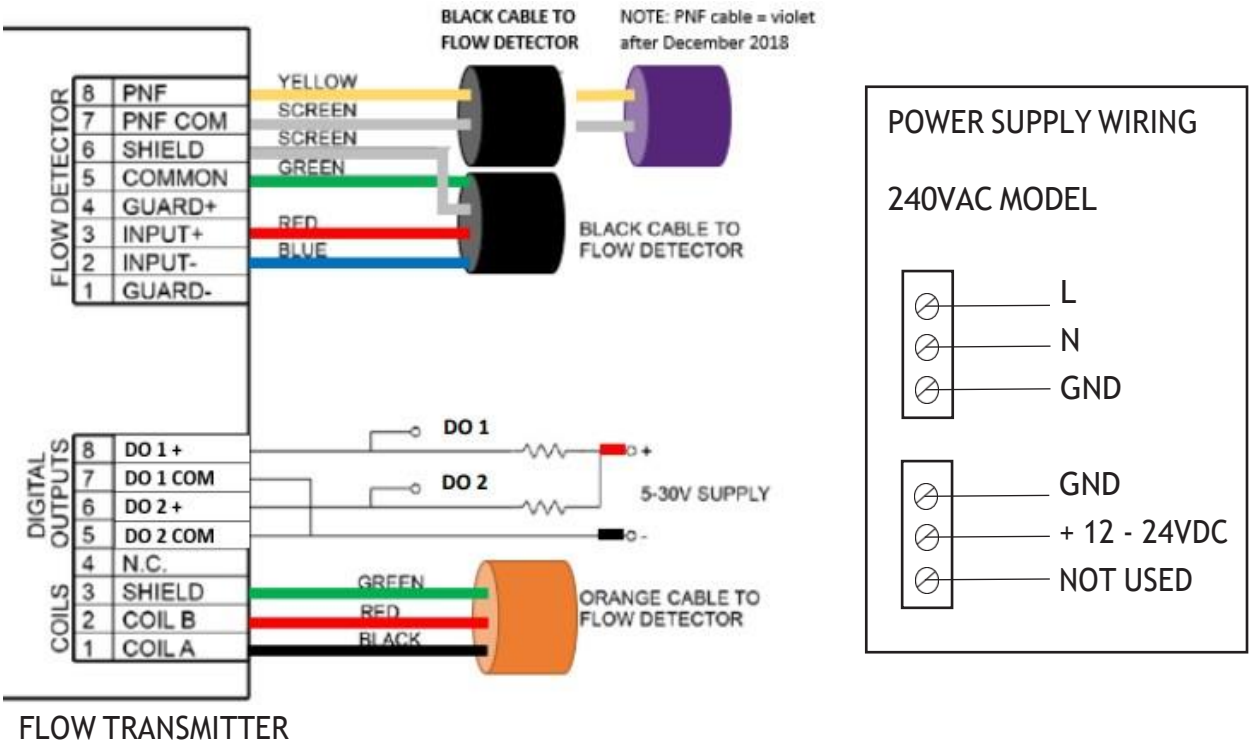

FLOW DETECTOR INSTALLATION

Flow Signal

The flow signal is received via the shielded 4 core black cable. The cable should be located against the inside of the box down to the terminal strip. It needs to be long enough to enable the battery to sit in the bottom of the enclosure and for the door to be opened without applying tension on the cable. The cable fits through the M16 gland.

Electrical connections should be carried out following best practices outlined in the Australian Standards for Wiring AS/NZS 3000:2007.

Coil Connection

The coils are connected using the orange sheathed cable with red, black and green cores. The coil cable fits into the M20 gland of the transmitter.

Pipe Not Full Cable

Where required a second black cable is fitted, the yellow conductor connects to PNF input and the shield is connected to PNF Shield.

Data transmission cable

Where fitted, a data cable or 4-20mA transmission cable can be inserted through an M16 gland or through the M25 conduit entry provided the conduit is of appropriate dimensions.

Conduit Entry

The M25 gland is able to seal effectively provided the conduit diameter is between 11mm and 17mm.

KEY FEATURES

Low Power Mode Operation

The M500 Flowmeter is designed for low power operation at remote sites. A power saving mode is available whereby the unit remains in a sleep (low power) mode and only wakes up and performs a measurement (high power) mode at user predefined intervals. Typically the units are configured to wake up every 3-5 minutes and remain awake for 30 seconds. During the shutdown or sleep period, the flow totalisers continue to accumulate in real time, and all outputs such as pulse, frequency and current outputs continue to operate. Serial communications are available at any time. If two successive zero flow detections occur, the system shuts down for a configurable extended off period. (Refer to the section below - Configuration).

To read the meter while in the power saving mode it is simply a matter of pushing the tick button. This will wake the system up to initiate a new flow measuring cycle and to update the display with the new flow rate. This feature can also be used when setting or adjusting the flow rate.
The LCD and backlight have programmable off-times: pressing a key will wake the LCD which has an auto-off feature.

Flow Measurement Process

- The unit wakes from Sleep mode after the user defined Off Time.
- The unit powers up the flow meter circuit and performs digital filtering to generate clean flow readings. After the fixed warm up period the LCD screen will update with flow reading.
- Smoothing (running average of between 1-100 points) is then applied to the flow readings.
- Unit will remain awake for the remainder of the Wake (On Time) with live flow updates
- After the Wake time the unit then returns to sleep mode.
- During sleep mode all outputs remain at their current values until the next wake up.
- All other data (Date, time, flow totals) continue to update in real time during the sleep mode.

Off time

The off time determines how long a period the device will enter into a low power state between corresponding scan intervals. Increasing the Off time decreases power consumption, while on the other hand, decreasing the Off time will provide more flow readings on a more regular basis.

On time

The On time determines how long the system is active for. The On time includes:

- Time to power up flow metering circuits
- Time to perform flow readings

Critically, the On time must be long enough to allow the device to generate a new flow reading. Without allowing for this, the flow rate would never be updated. To ensure this does not occur, the firmware automatically extends the On time, if the user has selected a value that is too short to generate a new flow reading at the current coil frequency or response time setting.

Shorter on times will typically reduce power consumption (only if the off time is > 0), while longer on times will allow more flow readings to be performed in quick concession.

No Flow Condition

When the flow rate falls below a specified value "Zero Flow Cut Off" the transmitter forces the flow rate to zero and a 'LOW FLOW' message appears on the LCD screen.

Pipe Not Full Condition

The flowmeter includes a 'Pipe Not Full' function which can be enabled or disabled in the configuration. The transmitter utilises an electrode located at the top of the pipe. If there is no water covering the electrode then the transmitter will show a 'PIPE NOT FULL' message. If a "Pipe Not Full" conditions is detected - flow rate is forced to zero flow.

KEY FEATURES

Digital Outputs

There are two standard plus two optional digital outputs which are opto-isolated open collector NPN outputs. These outputs can be configured to operate in the following modes:

- Frequency output: the frequency is proportional to the selected flow channel which may be flow rate, velocity or mass flow. The range of output frequency can be programmed in the range 0 to 1000 Hz. Frequency output will continue during power save mode. The frequency outputs allow retransmission of flow rate variables to an external system.
- Pulse output: pulses are generated in proportion to the occurrence of a specified volume of flow volume. For example the system may generate one pulse for every 10 litres. The duration of the pulse and the totaliser channel that causes the pulse can be selected. Pulse outputs continue during the power save mode. Pulse outputs are typically used to interface with remote counters, telemetry systems and watering systems.
- Alarm Indication: the output can be used to indicate an alarm condition, such as a fault condition. The alarm cause is able to be configured.

Dual Totalisers (Peak and Off Peak Flow Totals)

The 500 series includes two independent flow totaliser channels (Dual totalisers) to keep track of flow volumes that may be delivered during certain times of the day. This function is typically used to keep track of Pumped Flows delivered during Off Peak Electricity Tariffs, and flow volumes delivered during Peak Electricity Tariffs. The user can enter the start and stop times for the Off Peak Period (which usually coincides with low electricity demand – for example 23:00 – 07.00AM).

Modular Electronics

The 500 Series flow transmitter is designed to operate with a wide range of flow detectors (from 50mm up to 1000mm diameter) and has flexibility to be able to be swapped to operate on different flow detectors. Several user configuration parameters (Flow Tube Factor and Flow tube zero) are able to be changed to allow the transmitter to operate on different flow tubes. This feature allows a small number of spare electronics packages (doors) to be held for swapping into remote sites as required.

Signal Measurement & Processing

The unit wakes up to take measurements and provide various signal processing and digital filtering routines to deliver a highly accurate and repeatable flow signal. The outputs from the flow meter update only after a smooth clean flow reading is available. The user can configure the unit to best meet the measurement requirements and wide range of site conditions.

Electrode Check (EC measuring) & Signal Check (within range)

The I500 diagnostics checks the functionality of the electrodes and the presence of known faults in the signal which could be caused by an issue such as a short circuit inside the detector head or a fault in the cable.

KEY FEATURES

Operation

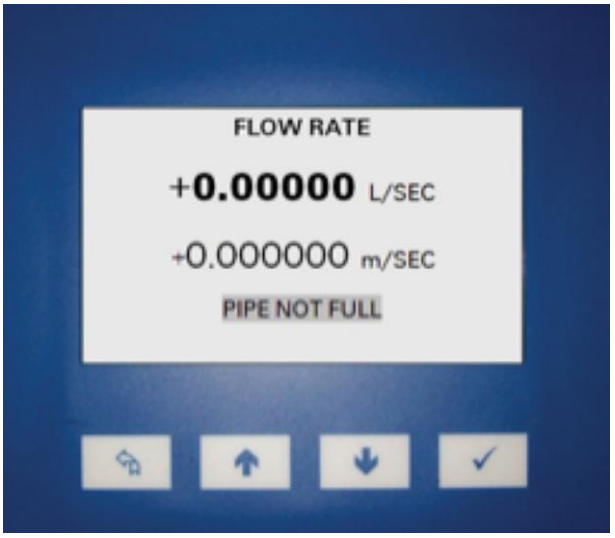

The M500 Electromagnetic Flowmeter local interface consists of a graphic LCD display with 4 button capacitive touch keypad.

Pressing the tick key will wake up the unit and activate the display. If the unit is in sleep mode then pressing a key will cause flow metering to recommence.

The local interface provides six main functions:

- Power up Display (self-test status and firmware version indication).
- Display of flow variables and alarms.
- Passcode entry.
- Read only display of settings and diagnostic information.
- Configuration of user settings (configuration menus).
- Calibration settings menu.

Power up Display

When first powered up, the flow transmitter performs a series of self-checks and auto calibration. The Firmware Version is displayed on the top line.

Code	Self Check Result if Pass
ADC	Digital operation of the 24 bit sampling Analog to Digital Converter is correct
ESN	The electronic serial identification number is valid: the serial number is displayed
CRC	The basic calibration data in EEPROM is valid
DAT	The file system on the SD Card is valid
RTC	Digital operation of the Real Time Clock is correct
PSU	A voltage within the correct range is present on either the battery or solar inputs
CIV	The flow detector coils are within the correct voltage and current range

KEY FEATURES

Password Access – LCD SCreen

The M500 is designed to meet new Australian standards for Non Urban Metering and provides several levels of password access and protection as follows:

Access Level	User Type	Functions	Password	
User	Landholder / Operator	Read Flow Data	No Password required	Push Any Button to scroll through display screens
Low	Water Baliff / CSO	Read Configuration & Diagnostic Settings	Level 0	Hold Tick Key 2s Enter Level 0 code
Med	Asset Owner / Meter Technician	Read all configuration and diagnostic settings, Limited Write capability	Level 1	Hold Tick Key 2s Enter Level 1 code
High	Asset Owner / Meter Technician	Full Read and Write Configuration Settings	Level 2	Hold Tick Key 2s Enter Level 2 code

Password Access – MagMate Software

The Mag Mate software prompts the user to enter a password to perform various changes as follows:

Access Level	User Type	Functions	Password	
Low	Water Service Officer	Connect to View and collect diagnostic & flow	No Password	
Med	Meter Technician	Read Configuration & Diagnostic & modify configuration Settings	Level 1	
High	Asset Owner / Factory trained & cerified Meter Technician	Full Read and Write access to all available Configuration Settings	Level 2	

Note:

LCD Passwords can be changed by the user.

(User is permitted to change current level password or lower level passwords)

Magmate Passwords are hard coded into the I500.

If Passwords are lost or forgotten:
Please contact your Aquamonix service team for assistance.

KEY FEATURES

Flow and Totaliser Channels Displays (User Access Level 0)

Flow and totaliser channels are updated approximately once every second when the flowmeter is in sampling mode and the totalisers update once per second when also in sleep mode.

If the LCD is not active this does not necessarily mean that the flowmeter is in low power mode. Similarly, the LCD may be active when the flowmeter is not scanning and is in sleep mode.

Access to the flow and totaliser data displays does not require passcode access and the displays can be selected using the up and down arrow buttons.

The default flow channel display “Flow Rate” is shown left. This display will appear after the self test and version information display and shows the present flow rate, flow velocity and status of alarms.

In the example shown, the flow rate is 4.16832 litres per second, the flow velocity is 2.12295 metres per second.

```
FLOW RATE
+4.16832   L
           SEC
           M
VEL +2.12295  SEC
STATUS BAR
```

The STATUS Bar at bottom of screen will display any ALARM information

The display of alarms requires that the alarms are first configured through the setup menus and the alarm condition is active. As an example, alarm 1 can be configured for low battery alarm and when the battery voltage is low a message “Low Battery” will appear next to the text “ALM” on the LCD. There are 4 possible alarms and if more than one alarm exists then the display cycles through each alarm and displays the status on the LCD.

Pressing the up or down key will select the next display. Pressing the back key will return to the Flow Rate display.

The nett total display shows the nett (forward minus reverse flow total) and the forward and reverse total components.

```
NETT TOTAL
+1.712E5
           KL
FWD +171.173  KL
REV +0.00000  KL
```

The Peak Total display shows the totalised flow values during the peak period for the day. The forward and reverse totals are shown along with the volume units. The display units can be changed by entering the menu system.

```
PEAK TOTAL
FWD +171.173  KL
REV +41.9394  KL
```

Similarly, the Off-Peak Total display shows the totalised flow values during the off-peak period.

```
OFF PEAK TOTAL
FWD +171.173  KL
REV +41.9394  KL
```

KEY FEATURES

The Year To Date (YTD) Total screen shows the nett (forward less reverse) totalised flow value on the first line. The second and third lines show the forward and reverse flow values.

```
YTD TOTAL
+5.943E4
                KL
FWD +328.561    KL
REV +39219.4    KL
```

Thre are two power inputs to the flowmeter: a battery input and an optional input from a solar panel. The voltages for each are displayed on the Battery Voltage display.

```
BATTERY VOLTAGE

BAT +12.3889    V
SOL +0.00000    V
```

The Reset/Uptime screen provides diagnostic information. It shows the number of power on resets. And the uptime since the last reset in days and hours.

```
RESET/UPTIME
RST  0002
DAY  0005
HRS  02:02:58
```

The flow totaliser units (kilolitres, in the above example) can be changed in the configuration menus. This is discussed in detail in a following section. The latch date (start of the year) and peak and off-peak times (hours of day) can also be configured using the menu.

Passcode Entry

Passcodes are used by the 500 series flow transmitter to provide multi-level access to data displays. The passcode access automatically expires one minute after the user exits back to the channel data displays. Until the passcode expires, the user retains access to the user settings and further information pages without having to re-enter the passcode. Once the passcode expires, the user is prompted to enter a password prior to gaining access to restricted areas.

There are 3 levels of passcode protection, described below.

Level	Access
0	Correct passcode allows full read, no write.
1	Correct passcode allows full read, limited write
2	Correct passcode allows full read and full write.

Access level 0 requires a valid passcode and allows the user to view all information but not make changes.

Access level 1 requires a valid passcode to be entered and allows the user to view all information and make changes to the configuration (setup) settings. Write access is limited to configuration setup parameters: calibration settings are read-only.

Access level 2 provides full read and write access including calibration settings.

If a user enters a level one passcode, the passcode must be allowed to expire before entering a level two passcode.

The method to enter a passcode is shown below.

To access the Passcode entry page, hold the 'tick' button when viewing any of the channel data displays pages from the Data Channel series of pages.

```
FLOW RATE
+4.16832        L
                SEC
                M
VEL +2.12295    SEC
STATUS BAR
```

KEY FEATURES

After holding the ‘Tick’ button for 2 seconds, the user is prompted with the passcode entry page.

```
ENTER ACCESS CODE

0000
```

The cursor can be moved left and right using the up and down buttons.

```
ENTER ACCESS CODE

0000
```

Pressing ‘Tick’ selects a digit. The inverted digit indicates that it can now be changed.

```
ENTER ACCESS CODE

0000
```

Pressing ‘Up’ or ‘Down’ increments or decrements the digit.

```
ENTER ACCESS CODE

0100
```

Pressing ‘Tick’ accepts the change.

```
ENTER ACCESS CODE

0100
```

The access code is not validated until the user presses the Back button.

In this example, ‘0123’ is a valid level 2 passcode.

```
ENTER ACCESS CODE

0123
LEVEL 2 ACCESS
```

Repeating the above steps with an invalid passcode results in denied access.
After displaying the screen for approximately 1 second, a failed passcode attempt returns to the previous Data Channels display.

```
ENTER ACCESS CODE

0000
ACCESS DENIED
```

KEY FEATURES

Settings and Diagnostic Information Displays (User Access Level 1 or 2)

The settings and diagnostic information displays can be viewed only with access level 1 or 2 and by a momentary press of the tick key. The information is shown in summary format so that it can be concisely displayed. A description of the information displayed is presented below.

SITE ID: an assignable number and is independent of the Modbus address.

METER ID: an assignable number and is independent of the Modbus address.

SERIAL NUMBER: each flow transmitter has a unique electronic serial number in a 12 digit hexadecimal format, as shown. Refer this number in any warranty or technical support enquiries.

```
        IDENTIFICATION

SITE ID                    0
METER ID                   0
SERIAL NUMBER:
 9A-17-25-01-00-00
```

CARD SLOT 1 – 3: shows the currently installed option cards.

```
        OPTION CARDS

CARD SLOT 1            MODEM
CARD SLOT 2             NONE
CARD SLOT 3             NONE
```

The 500 series flow transmitter has 4 alarms that can be configured to generate a digital output and/or for alarm event logging. The Alarm Status display shows the configuration of the 4 alarms at the left, and the status of each alarm at the right.

```
        ALARM STATUS

LO BATTRY                  0
SYS FAULT                  0
LOW FLOW                   0
NOT USED                   0
```

BATTERY VOLTS: Battery Voltage at the power connector.

SOL VOLTS: Solar Voltage at the power connector. This voltage may show a non-zero reading when the solar panel is not connected. This is normal and does not indicate any fault in the electronics.

BATTERY AMPS: Battery Current during solar charging.

TEMPRATURE: temperature within the flow transmitter enclosure [°C]. This may differ from outside air temperature.

SIGNAL IN: Signal Input Voltage. The voltage of the flow signal from the flow detector in millivolts.

```
        MONITORING

BATT VOLTS              11.92
SOL VOLTS                0.00
BATT AMPS               0.062
TEMPRATURE               24.8
SIGNAL IN               0.372
```

DATE/TIME: current date and time.

The current date and time shown in the format dd/mm/yy hh:mm:ss.

The example shows the time is 38 seconds past 3:16pm on the 15th of June 2009.

FACTORY CALIBRATED: date and time the unit was calibrated in the factory.

LAST FIELD CALIBRATED: date and time the unit was last calibrated in the field using the Aquamonix infield verification tool.

```
        DATE AND TIME

DATE TIME:
 15/06/2009          15:16:38
FACTORY CALIBRATED:
 25/02/2008          14:31:12
LAST FIELD CALIBRATED:
 02/11/2008          09:02:57
```

KEY FEATURES

COIL CURRENT is the coil current setting in mA (not the measured current).

TUBE SET 0 to 2: the threshold flow voltage defined in mV. If the unit is calibrated for multi-tube factor operation, this setting allows the device to utilise settings specifically calibrated for low flow operation.

CALIBRATION 1/3	
COIL CURRENT	100
TUBE SET 0	0.0000
TUBE SET 1	0.0000
TUBE SET 2	0.0000

TUBE FCTR 1-4: the calibrated tube factors.

TUBE ZERO: the calibrated tube zero.

CALIBRATION 2/3	
TUBE ZERO	0.0000
TUBE FCTR 1	4000.00
TUBE FCTR 2	4000.00
TUBE FCTR 3	4000.00
TUBE FCTR 4	4000.00

DENSITY: the relationship between flow rate and mass flow rate.

COIL FREQ.: the coil output switching frequency to drive the coils in the tube.

PIPE DIA.: the diameter of the pipe in mm.

MAINS FREQ.: the frequency of the rejection filter used for the input signal processing.

CALIBRATION 3/3	
DENSITY	1.0
COIL FREQ.	8.0
PIPE DIA.	50
MAINS FREQ.	50

SIMULATE MODE: Simulation Mode,

0. Normal operation

1. Flow signal simulation

2. Coil DC output simulation.

FAILSAFE LOW: determines whether the flow rate outputs assume zero or full scale on a signal fault.

PNF DETECTOR: the pipe not full detector status: enabled (ON) or disabled (OFF).

PNF THRESHLD: a set point for the PNF detector.

EC THRESHLD: a set point for the Electrode Checking detector.

CONFIGURATION 1/3	
SIMULATE MODE	0
FAILSAFE LOW	ON
PNF DETECTOR	ON
PNF THRESHLD	0.150
EC THRESHLD	0.100

SIMUL. VAL: value that is set when the simulation mode is enabled.

FULL SCALE: flow rate full scale - used for the high flow rate alarm set-point, expressed in the flow rate units.

LOW CUTOFF: Low flow rate cut-off, expressed as a velocity in mm/sec. The percentage of full scale below which flow is considered to be negligible and therefore 0.

ZERO CUTOFF: Low flow rate cut-off, expressed as a velocity in mm/sec. The percentage of full scale below which flow is considered to be negligible and therefore 0.

CONFIGURATION 2/3	
SIMUL. VAL	9.000
FULL SCALE	2.75
LOW CUTOFF	50.000
ZERO CUTOFF	30.000

KEY FEATURES

VOLUM. FCTR, TIME FCTR, TOTALS FCTR: scaling factors can be applied to the volume, time and totaliser units instead of standard units: these are the scaling factors.

```
      CONFIGURATION 3/3

VOLUM FCTR                1.000
TIME FCTR                 1.000
TOTALS FCTR               1.000
```

OFF PEAK START: Off peak period start time in 24 hour format.

OFF PEAK STOP: Off peak stop time in 24 hour format

END OF YEAR LATCH: end of year latch date. The date at which the YTD totals are all reset to 0. It is in the format hh:mm:ss dd-MMM The example shows that the latch date occurs at the very beginning of the new year (1st January at 00:00:00).

```
        PEAK TOTALISER

OFF PEAK START
 30/06/2011             23:00:00
OFF PEAK STOP
 30/06/2011             07:00:00
END OF YEAR LATCH
 01/07/2011             00:00:00
```

Alarm settings show the alarm cause, for example low battery, low flow, high flow, pipe not full, system fault, forward flow, reverse flow.

LOG ALARM: if ON the alarm is logged to the SD card when the alarm condition changes from false to true.

```
       ALARM SETTINGS 1

ALARM 1        SYS FAULT
LOG ALARM 1                OFF

ALARM 2        PNF
LOG ALARM 2                OFF
```

TYPE: selectable from frequency output, pulse output, alarm output or disable.

MAX FREQ: the maximum output frequency when in frequency mode. This value correlates to the full scale flow rate.

CHANNEL: the channel that causes the pulse or frequency output.

PULSE SCALE: the value of each pulse output in Litres. The example shows that each pulse represents 1L of flow.

PULSE WIDTH: the width of the pulse in ms. The example shows that each pulse has a width of 20ms.

STATUS: shows the current status of the output (ON or OFF).

```
       DIGITAL OUTPUT 1

TYPE                      FREQ
MAX FREQ.                 1000
CHANNEL                      0
PULSE SCALE                  1
PULSE WIDTH                 20
STATUS                     OFF
```

ACTION: selectable from forward (0% = 4mA, 100% = 20 mA), reverse (0% = 20 mA, 100% = 4mA), bidirectional (0% = 12mA, 100% = 20 mA, -100% = 4 mA).

CHANNEL: selectable from flow rate, flow velocity or mass flow.

DAMPING: a signal smoothing factor.

ZERO TRIM: the flow value at which the output is 0%.

SPAN TRIM: the flow value at which the output is 100%.

```
       ANALOG OUTPUT A

ACTION                     OFF
CHANNEL                      0
DAMPING                  1.000
ZERO TRIM                1.000
SPAN TRIM                1.000
```

KEY FEATURES

MODE: selectable RS232 or RS485/422.

ADDRESS: Modbus address 0..247

BAUD RATE: selectable 9600, 19200, 38400.

SETTINGS: selectable N,8,1 or N,7,1.

```
        SERIAL PORT

MODE                    RS232
ADDRESS                     1
BAUD RATE               38400
SETTINGS                N,8,1
```

COIL VOLTS: The steady-state coil voltage when current is applied.

COIL CURRENT: the steady state measured coil current setting in Amps.

COIL OHMS, Coil resistance. The measured resistance of the coils.

```
         COIL DRIVE

COIL VOLTS                9.9
COIL CURRENT             0.10
COIL OHMS              98.743
```

This display shows the status of the diagnostic checks that are regularly performed by the flow transmitter.

```
        FAULT STATUS

LOW BATTERY                0
COIL FAULT                 1
SIGNAL BAD                 0
TEMPRETURE                 0
```

Configuration (User Access Level 2)

It is highly recommended that all configuration settings be checked and documented to ensure the unit is configured to suit the particular site requirements and to provide a history of the site configuration settings.

Configuration Menus

The configuration menu is accessed by entering a valid Level 2 passcode.

Back button – return to previous display.

Up and down buttons - move selection.

Tick button – select menu option.

```
      PARAMETER MENUS

0.  CALIBRATION MENU
1.  VALUES MENU
2.  UNITS MENU
3.  GENERAL MENU
4.  SCANNING MENU
5.  TOTALISER MENU                ▼
```

```
      PARAMETER MENUS

5.  TOTALISER MENU                ▲
6   ALARMS MENU
7.  DIGITAL OUT MENU
8.  ANALOG OUT MENU
9.  SERIAL PORT MENU
10. MODEM MENU
```

Configuration Sub-menus

Each menu selection has a submenu that allows parameters to be selected to change settings.

Back button – returns to configuration menu.

Up and down buttons - move selection.

Tick button – select submenu option.

```
      VALUES PAREMETERS

1.1  FLOW FULL SCALE
1.2  LOW FLOW CUTOFF
1.3  PIPE FULL DETECT
1.4  RESPONSE TIME
1.5  FAIL SAFE MODE
```

KEY FEATURES

Parameter Types

There are four main parameter types as outlined below.

Type	Example Display	Description
Option	2.1 FLOW VOLUME UNIT MEGALITRES CUBIC METERS KILOLITRES ■ LITERES CUBIC FEET IMP GALLONS ▼	Option selection The user is able to select from a list of options/choices using the up and down buttons. Pressing the back key selects that option. The option when selected is saved to the non-volatile settings memory.
Numeric	2.2 FLO UNIT FACTOR CURRENT: +1.000 +1.000	Numeric entry The user is able to change the number to any number within a valid range. The current value is displayed for reference. The method for changing settings with a number field is shown in a following section.
Time	3.7 CURRENT TIME FORMAT: HH:MM:SS 15:16:38	Time entry The user is able to change the time field within the specified HH:MM:SS format. Note that the time is 24 hour format.
Date	3.8 CURRENT DATE FORMAT: DD/MM/YY 15/06/09	Date entry The user is able to change the date field within the specified DD/MM/YY format.

KEY FEATURES

Changing Numeric Parameters

Screen	Action
2.2 FLOW UNIT FACTOR CURRENT: +1.000 +1.000	The screen shows the number from the field matching that of the current value. The cursor is currently underneath the '+' symbol. The next image shows the effect of pressing 'Tick'.
2.2 FLOW UNIT FACTOR CURRENT: +1.000 +1.000	Pressing 'Tick' when the cursor is beneath the sign ('+' or '-'), allows the symbol to be modified. The picture shows an inverted '+' symbol, indicating it can be changed as per the next image in the series.
2.2 FLOW UNIT FACTOR CURRENT: +1.000 -1.000	Pressing 'Up' or 'Down causes the sign of the number to change. The number is now a negative number.
2.2 FLOW UNIT FACTOR CURRENT: +1.000 -1.000	Pressing Tick accepts the change, returning the cursor to the digit select format. Pressing 'Up' or 'Down' now moves the cursor to the left and right respectively.
2.2 FLOW UNIT FACTOR CURRENT: +1.000 -1.000	Pressing 'Down' causes the cursor to move to the right and underneath the most significant digit.

KEY FEATURES

Changing Numeric Parameters

Screen	Action
2.2 FLOW UNIT FACTOR CURRENT: +1.000 −1.000	Pressing ‘Down’ causes the cursor to move beneath the decimal symbol.
2.2 FLOW UNIT FACTOR CURRENT: +1.000 −1.000 ↑	Pressing ‘Tick’ selects the decimal point, placing an arrow beneath it and allowing it to be moved left or right. Note: The pictured example, will not allow the decimal point to move further left. Nor can the decimal point move further right than the last digit.
2.2 FLOW UNIT FACTOR CURRENT: +1.000 −10.00 ↑	Pressing ‘Down’ moves the decimal point 1 digit to the right.
2.2 FLOW UNIT FACTOR CURRENT: +1.000 −10.00	Pressing ‘Tick’ accepts the new location of the decimal point and returns the cursor to the digit select mode.
2.2 FLOW UNIT FACTOR CURRENT: +1.000 −10.00	Pressing ‘Down’ moves the cursor to the right.

KEY FEATURES

Changing Numeric Parameters

Screen	Action
2.2 FLOW UNIT FACTOR CURRENT: +1.000 −10.00	Pressing ‘Tick’ selects the digit and allows it to be modified. Pressing ‘Up’ and ‘Down’ in the selected state increment or decrements the digit respectively.
2.2 FLOW UNIT FACTOR CURRENT: +1.000 −10.90	Pressing ‘Down’ decrements the digit causing the number to wrap back around to ‘9’. Note: Pressing ‘Back’ when a digit is selected causes the digit to return to the previous value and the cursor to its original state as a digit select cursor.
2.2 FLOW UNIT FACTOR CURRENT: +1.000 −10.90	Pressing ‘Tick’ accepts the new value for the digit.
2.2 FLOW UNIT FACTOR CURRENT: +1.000 −10.90 SAVE CHANGES: YES NO	Pressing ‘Back’ prompts the user whether they wish to save the modified number to the current setting. Pressing ‘Tick’ when “NO” is selected causes the device to return to the previous menu without saving the modified number. Pressing ‘Up’ or ‘Down’ moves the selected option as shown in the next image in the series.
2.2 FLOW UNIT FACTOR CURRENT: +1.000 −10.90 SAVE CHANGES: YES NO	Pressing ‘Tick’ when “YES” is selected from the save change prompt causes the device to return the screen to the previous menu and saves the new setting causing it to take effect.

KEY FEATURES

Changing Time Parameters

Screen	Action
3.7 CURRENT TIME FORMAT: HH:MM:SS 15:16:38	The time field allows the user to change any of the digits individually. Pressing ‘Up’ or ‘Down’ moves the cursor left or right respectively.
3.7 CURRENT TIME FORMAT: HH:MM:SS 15:16:38	Pressing ‘Down’ moves the cursor to the next digit on the right.
3.7 CURRENT TIME FORMAT: HH:MM:SS 15:16:38	Pressing ‘Down’ moves the cursor to the next digit on the right.
3.7 CURRENT TIME FORMAT: HH:MM:SS 15:16:38	Pressing ‘Down’ moves the cursor to the next digit on the right.
3.7 CURRENT TIME FORMAT: HH:MM:SS 15:16:38	Pressing ‘Tick’ allows the selected digit to be modified by pressing ‘Up’ or ‘Down’.

KEY FEATURES

Changing Time Parameters

Screen	Action
3.7 CURRENT TIME FORMAT: HH:MM:SS 15:15:38	Pressing ‘Down’, decreases the value of the selected digit by 1. Pressing ‘Back’ returns the digit to the previous value, pressing ‘Tick’ changes the digit to the new value while both keys cause the cursor to return to the digit select cursor type.
3.7 CURRENT TIME FORMAT: HH:MM:SS 15:15:38	The user has pressed ‘Tick’ accepting the new value and returning the cursor to the digit select type.
3.7 CURRENT TIME FORMAT: HH:MM:SS 15:15:38 YES SAVE CHANGES: NO	Pressing ‘Back’ prompts the user if they wish to save the new value. Pressing ‘Back’ removes the save change prompt. Pressing ‘Up’ or ‘Down’ changes the response to “YES” or “NO”. Responding with “NO” results in the device returning to the previous setting menu without making changes to the time setting.
3.7 CURRENT TIME FORMAT: HH:MM:SS 15:15:38 YES SAVE CHANGES: NO	Selecting “YES” returns the unit to the previous setting menu saving the new time setting.y

KEY FEATURES

Changing Date Parameters

Screen	Action
3.8 CURRENT DATE FORMAT: DD/MM/YY 15/06/09	The date field allows the user to change any of the digits individually. Pressing ‘Up’ or ‘Down’ moves the cursor left or right respectively.
3.8 CURRENT DATE FORMAT: DD/MM/YY 15/06/09	Pressing ‘Down’ moves the cursor to the next digit on the right.
3.8 CURRENT DATE FORMAT: DD/MM/YY 15/06/09	Pressing ‘Tick’ allows the selected digit to be modified by pressing ‘Up’ or ‘Down’.
3.8 CURRENT DATE FORMAT: DD/MM/YY 14/06/09	Pressing ‘Down’, decreases the value of the selected digit by 1. Pressing ‘Back’ returns the digit to the previous value, pressing ‘Tick’ changes the digit to the new value while both keys cause the cursor to return to the digit select cursor type.
3.8 CURRENT DATE FORMAT: DD/MM/YY 14/06/09	Pressing ‘Tick’ the user has changed the date from the 15th to the 14th.

KEY FEATURES

Changing Date Parameters

Screen	Action
3.8 CURRENT DATE FORMAT: DD/MM/YY 14/06/09 SAVE CHANGES: YES NO	Pressing ‘Back’ prompts the user if they wish to save the new value. Pressing ‘Back’ removes the save change prompt. Pressing ‘Up’ or ‘Down’ changes the response to “YES” or “NO”. Responding with “NO” results in the device returning to the previous setting menu without making changes to the date setting.
3.8 CURRENT DATE FORMAT: DD/MM/YY 14/06/09 SAVE CHANGES: YES NO	Selecting “YES” returns the unit to the previous setting menu saving the new date setting.

When YES is selected from the Save Changes prompt, it may take up to 30 seconds until the change is stored within non-volatile memory.

KEY FEATURES

Selection and Configuration of Digital Output Parameters

Screen	Action
ENTER ACCESS CODE 0000	After holding the 'Tick' button for 2 seconds, the user is prompted with the passcode entry page. Enter Level 1 / Level 2 access code.
METER MENUS 2.UNITS MENU 3.GENERAL MENU 4.SCANNING MENU 5.TOTALISER MENU 6.ALARMS MENU 7.DIGITAL OUT MENU ▼	Select '7. DIGITAL OUT MENU'. Using the up and down arrows, and pressing TICK.
DIGITAL OUTPUTS 7.1 DIG OUT MODE 1 7.2 FREQUENCY MAX 1 7.3 INPUT CHANNEL 1 7.4 PULSE SCALE 1 7.5 PULSE WIDTH 1 7.6 DIG OUT MODE 2 ▼	Select mode for channel 1 using 'DIGITAL OUT MODE' (item 7.1). The choices include Off, Frequency, Pulse and Alarm.

KEY FEATURES

Selection and configuration of ‘frequency output’ method

Screen	Action
7.1 DIG OUT MODE OFF FREQUENCY PULSE ALARM ▼	Select ‘FREQUENCY’ from menu item 7.1 using the up and down arrows, and press TICK. Press ‘back’ to go back to the DIGITAL OUTPUTS menu.
DIGITAL OUTPUTS 7.1 DIG OUT MODE 1 7.2 FREQUENCY MAX 1 7.3 INPUT CHANNEL 1 7.4 PULSE SCALE 1 7.5 PULSE WIDTH 1 7.6 DIG OUT MODE 2 ▼	Select ‘FREQUENCY MAX 1’ from the digital outputs menu. Press TICK.
FREQUENCY MAX 1 CURRENT: +1000 +1000	For frequency Max 1: Select frequency max (menu item 7.2) choosing a value between 0 and 1000. Values can be chosen by: (1) pressing the up and down arrows to select the number, (2) pressing TICK to modify the number, and (3) pressing the up and down arrows to change the number. Press ‘BACK’ to exit the FREQUENCY MAX 1 selection.
DIGITAL OUTPUTS 7.1 DIG OUT MODE 1 7.2 FREQUENCY MAX 1 7.3 INPUT CHANNEL 1 7.4 PULSE SCALE 1 7.5 PULSE WIDTH 1 7.6 DIG OUT MODE 2 ▼	Select ‘7.3 INPUT CHANNEL 1’ from the digital outputs menu.
7.3 INPUT CHANNEL VELOCITY FLOW RATE MASS FLOW FWD TOTAL REV TOTAL NETT TOTAL	From Input channel 1, select the parameter for monitoring from the list of ‘velocity’, ‘flow rate’, ‘mass flow’, ‘fwd total’, ‘rev total’, and ‘nett total’.

KEY FEATURES

Selection and configuration of ‘pulse output’ method

Screen	Action
7.1 DIG OUT MODE OFF FREQUENCY PULSE ALARM ▼	Select ‘PULSE’ from menu item 7.1.
DIGITAL OUTPUTS 7.1 DIG OUT MODE 1 7.2 FREQUENCY MAX 1 7.3 INPUT CHANNEL 1 7.4 PULSE SCALE 1 7.5 PULSE WIDTH 1 7.6 DIG OUT MODE 2 ▼	Select input channel 1 (option 7.3).
7.3 INPUT CHANNEL VELOCITY FLOW RATE MASS FLOW FWD TOTAL REV TOTAL NETT TOTAL	From Input channel 1, select the parameter for monitoring from the list of ‘velocity’, ‘flow rate’, ‘mass flow’, ‘fwd total’, ‘rev total’, and ‘nett total’.
DIGITAL OUTPUTS 7.1 DIG OUT MODE 1 7.2 FREQUENCY MAX 1 7.3 INPUT CHANNEL 1 7.4 PULSE SCALE 1 7.5 PULSE WIDTH 1 7.6 DIG OUT MODE 2 ▼	Select ‘PULSE SCALE’. (item 7.4)

KEY FEATURES

Selection and configuration of ‘pulse output’ method

Screen	Action
PULSE SCALE 1 CURRENT: 0100 0100	Note: there is a factor of x10 in the pulse scale output. i.e. 0100 equates to 1000L. Values can be chosen by: (1) pressing the up and down arrows to select the number, (2) pressing TICK to modify the number, and (3) pressing the up and down arrows to change the number. Press ‘BACK’ to exit the PULSE SCALE 1 selection.
DIGITAL OUTPUTS 7.1 DIG OUT MODE 1 7.2 FREQUENCY MAX 1 7.3 INPUT CHANNEL 1 7.4 PULSE SCALE 1 7.5 PULSE WIDTH 1 7.6 DIG OUT MODE 2 ▼	Select item 7.5 ‘PULSE WIDTH’. Set the pulse width (default value is 020), by following the same procedure as followed when setting the pulse scale.

Notes:

- The pulse train out of the Digital Output is nonlinear (different to the I300 and M300 where the pulse train out of the DO is linear).

- Missed pulses (where the maximum frequency pulse output has been exceeded) will be ‘caught up’. I.e. the I500 will generate additional pulses in order to catch up on the pulses which have been missed.

KEY FEATURES

Selection and configuration of ‘alarm’ method

Screen	Action
7.1 DIG OUT MODE OFF FREQUENCY PULSE ALARM ▼	Select ‘alarm’ from menu item 7.1.
METER MENUS 2.UNITS MENU 3.GENERAL MENU 4.SCANNING MENU 5.TOTALISER MENU 6.ALARMS MENU 7.DIGITAL OUT MENU ▼	Go back to the main ‘meter menus’ screen by pressing the back button. Select ‘6. Alarms menu’.
ALARMS PARAMETERS 6.1 ALARM CAUSE 1 6.2 LOG ALARM 1 6.3 ALARM CAUSE 2 6.4 LOG ALARM 2 6.5 ALARM CAUSE 3 6.6 LOG ALARM 3 ▼	Select item 6.1 ‘ALARM CAUSE 1’.
6.1 ALARM CAUSE 1 LOW BATTERY PIPE NOT FULL SYSTEM FAULT LO FLOW HI FLOW FORWARD FLOW	From ALARM CAUSE 1, select the alarm cause from the list: ‘low battery’, ‘pipe not full’, ‘system fault’, ‘low flow’, ‘high flow’, and ‘forward flow’.
6.2 LOG ALARM 1 OFF ON	From menu 6.2 LOG ALARM 1: Select ‘OFF’ or ‘ON’. Repeat process for alarms 2 to 4.

KEY FEATURES

Detailed Menu Parameter List

Parameters are shown below in the order that they appear in the menu and submenu system. Each parameter accessible from faceplate is listed below. Please note that the tables below do not include a full listing or description of the available Modbus registers.

Item ID	Submenu Name	Value or Selection Range	Description
0.1	PIPE SIZE UNITS	MILLIMETERS INCHES	Defines the unit of measure for the pipe diameter.
0.2	NOMINAL PIPE DIA	0 to 2000	Defines the dimension for the pipe diameter in the units defined in SA.1.
0.3	METER ID	0 to 999999	The ID of the attached flow detector head.
0.4	FLOW FULL SCALE	0 to 9999.9	Sets the value for the high flow alarm setpoint.
0.5	TUBE ZERO	-100 to 100	CAUTION. Changing this value is not advised. Changing this value may affect the rated accuracy of the device.
0.6 0.7 0.8 0.9	TUBE FACTOR 1 - 4	0 to 10000	CAUTION. Changing this value is not advised. Changing this value may affect the rated accuracy of the device.
0.10 0.11 0.12	TF CHANGEOVER 1 - 3	-40 to 40	CAUTION. Changing this value is not advised. Changing this value may affect the rated accuracy of the device.
0.13	DENSITY	0 to 5.0	The density of the flow medium.
0.14	COIL FREQUENCY	0 to 8	Decreasing the coil frequency may be required for media with low electro conductivity. Higher frequencies reduce the minimum amount of time the device must be on to generate flow readings thus potentially reducing power consumption.
0.15	COIL CURRENT	80 to 200 (I500 Only)	CAUTION. Changing this value is not advised. Changing this value may affect the rated accuracy of the device.
0.16 0.18	4-20 TRIM ZERO 1 - 2	-10 to 10	Allows trimming of the 0% flow current output.
0.17 0.19	4-20 TRIM SPAN 1 - 2	-10 to 10	Allows trimming of the 100% flow current output.
0.20	MAINS FREQUENCY	50HZ 60HZ 50/60HZ	Selects the flow signal filtering characteristic.
1.1	ZERO FLOW CUTOFF	0 to 50	Determines the lower limit of flow detection. (mm/s) Velocity below this limit is set to zero.

KEY FEATURES

Item ID	Submenu Name	Value or Selection Range	Description
1.2	LOW FLOW CUTOFF	0 to 50	Determines the lower limit of expected flow rate in mm/s – also used as Low Flow Alarm Trigger Point..
1.3	PIPE FULL DETECT	ENABLE DISABLE	Determines whether the device performs pipe not full detection prior to scanning.
1.4	RESPONSE TIME	1 to100	Determines how much smoothing is applied to the signal. The longer the response time, the longer it takes for values to become updated, though there is less fluctuation between results.
1.5	FAIL SAFE MODE	FAIL LOW FAIL HIGH	Determines the flow output action when there is a measurement fault.
2.1	FLOW VOLUME UNIT	MEGALITRES CUBIC METRES KILOLITRES LITRES CUBIC FEET IMP GALLONS IMP MEGAGALLONS US GALLONS US MEGAGALLONS ACRE FEET SPECIAL FACTOR	This setting allows flexibility in the choice of flow rate units.
2.2	FLOW UNIT FACTOR	-999.9 to 999.9	Only valid if 'SPECIAL FACTOR' is selected for Flow volume unit. This allows a custom flow volume unit to be defined.
2.3	FLOW TIME UNITS	SECONDS MINUTES HOURS DAYS SPECIAL FACTOR	This setting allows flexibility in the choice of time base for the flow rate units.
2.4	TIME UNIT FACTOR	-999.9 to 999.9	Only valid if 'SPECIAL FACTOR' is selected for Time unit factor (S1.3). This allows a custom time base to be used for the flow rate.
2.5	TOTALISER UNITS	MEGALITRES CUBIC METRES KILOLITRES LITRES CUBIC FEET IMP GALLONS IMP MEGAGALLONS US GALLONS US MEGAGALLONS ACRE FEET SPECIAL FACTOR	This setting allows flexibility in the choice of units for the totalisers.
2.6	TOTALS UNIT FCTR	0 to 999.9	Only valid if 'SPECIAL FACTOR' is selected for totaliser unit (S1.5). This allows custom units for the totalisers.
3.1	SITE ID	0 to 999999	
3.2	BACKLIGHT TIME	0 to 999 [secs] 0 = always off.	The backlight has a timeout feature to reduce power consumption.

KEY FEATURES

Item ID	Submenu Name	Value or Selection Range	Description
3.3	LCD CONTRAST	0 to 99	
3.4	LCD TIME-OUT	1 to 999 [secs]	Time after the last key press before turning off the LCD to save power.
3.5 3.6	LEVEL 0 - 1 PASSCODE	0 to 9999	Allows the user to set a new passcode.
3.7	CURRENT TIME	HH:MM:SS	The current time in the format HH:MM:SS
3.8	CURRENT DATE	DD/MM/YY	The current date in the format DD/MM/YY
3.9	SIMULATION MODE	OFF FORCE FLOW RATE DC CURRENT OUT	0 – no simulation 1 – flow signal simulation 2 – coil dc simulation
3.10	SIMULATION VALUE	-999 to +999	Only valid when the simulation mode is non-zero, this value substitutes the flow rate. The velocity and mass flow channels are adjusted to reflect the simulated flow rate while the totalisers remain unchanged.
4.1	ON TIME	20 – 3600 [secs]	Flow scanning on time.
4.2	OFF TIME	0 – 3600 [secs]	Flow scanning off time
4.3	NO-FLOW OFF TIME	0 – 30000 [secs]	Flow scanning off time when there is no detected flow
4.4	DIAGNOSTIC RATE	1 - 20	This determines the rate at which diagnostic data is logged to flash memory. Diagnostic data is measured every scan period but is only logged on a multiple of the 'ON TIME'. Eg if On =30s, Off=300s, and Diag Rate = 10, the Diag Data would be logged every 10 x (300+30) = 3300 secs.
4.5	LOGGING PERIOD	60 - 43200	The logging period allows the unit to log flow data to flash memory at regular time steps. Logging rate is set in seconds. Eg 900s = 15 minute logging period.
5.1	OFF PEAK START	HH:MM:SS	Start time for "Off Peak Power"
5.2	OFF PEAK STOP	HH:MM:SS	Stop time for 'Off Peak Power"
5.3	EOY LATCH	DD/MM/YY	Latch date for YTD processing.
6.1 6.3 6.5 6.7	ALARM CAUSE 1 - 4	DISABLE ALARM LOW BATTERY PIPE NOT FULL SYSTEM FAULT LO FLOW HI FLOW FORWARD FLOW REVERSE FLOW	Selects the cause of the alarm.
6.2 6.4 6.6 6.8	LOG ALARM 1-4	ON or OFF	Determines whether the alarm is logged to the SD card file when the alarm status changes from false to true.
7.1 7.6 7.11 7.16	DIG OUT MODE 1 - 4	OFF FREQUENCY PULSE ALARM	Selects the mode of operation for a digital output.

KEY FEATURES

Item ID	Submenu Name	Value or Selection Range	Description
7.2 7.7 7.12 7.17	FREQUENCY MAX 1 - 4	-1000 to 1000	Defined in Hz, the maximum frequency is only relevant if the corresponding Digital output mode is set to frequency.
7.3 7.8 7.13 7.18	PULSE CHANNEL 1 - 4	VELOCITY FLOW RATE MASS FLOW FWD TOTAL REV TOTAL NETT TOTAL	Only valid when the Digital Output is configured for Pulse Output, this setting control's which Totals channel is monitored.
7.4 7.9 7.14 7.19	PULSE SCALE 1 - 4	1 to 50000	The pulse scale determines the value of each pulse generated. If the totals units are kL and the default pulse scale is used, then the value of a single pulse is 1L.
7.5 7.10 7.15 7.20	PULSE WIDTH 1 - 4	20 to 125	Sets the pulse duration. The setting is defined in ms.
8.1 8.7	OUTPUT 1 – 2 MODE	OFF FORWARD REVERSE BIDIRECT	Analog output mode.
8.2 8.8	OUT 1 – 2 CHANNEL	VELOCITY FLOW RATE MASS FLOW	Analog output data channel
8.3 8.9	DAMPING 1 - 2	0 to 9.9	Analog output damping [seconds]
8.4 8.10	ZERO 4-20 1 - 2	0 to 99999	Data channel value for 0% output.
8.5 8.11	SPAN 4-20 1 - 2	0 to 99999	Data channel value for 100% output.
8.6 8.12	ALARM LIMIT 1 - 2	20 to 120	Percentage above which alarm is indicated by over range signal.
9.1	PORT MODE	RS232 RS485 RS422	Sets the option board for the electrical interface.
9.2	BAUD RATE	9600 19200 38400	Selects the serial port baud rate.
9.3	MODBUS ADDRESS	0 to 247	Modbus address.
9.4	REBOOT	CANCEL REOOT	Forces a power on reset.

KEY FEATURES

Item ID	Submenu Name	Value or Selection Range	Description
10.1	MODEM ON DURATION	0 to 1440	Period of time that the modem power output is switched on.
10.2	MODEM INTERVAL	0 to 1440	The time period between switching on the modem power output. The output stays on for Modem On Duration.
10.3	MODEM ON TIME	HH:MM:SS	The time after which the modem on duration and interval take effect.
10.4	MODEM OFF TIME	HH:MM:SS	Time time of day when the modem on duration and interval cease to have an effect.

MAINTENANCE

General

As there are no moving parts in the Flow Transmitter there is very little maintenance. Provided the system is installed as per the instructions there are no parts to wear and the electronics and cable should be protected from external damage.

Flow Detector

There is no maintenance to be carried out on the detector itself. However if it is mounted in a position that enables large amounts of silt to settle in it, the silt should be removed as it will effect the overall inside area of the flowmeter which will in turn effect accuracy.

Cleaning and Decontamination - Transmitter

Proper safety precautions must be observed when field cleaning or decontaminating dirty equipment.

No eating, smoking, drinking, chewing, or any hand to mouth contact should be permitted during cleaning operations.

Always switch off the power prior to completing cleaning or decontamination procedure.

Use a dry rag to wipe dirt off the powder-coated metallic surfaces of the unit.

Stains or dirt on the LCD front viewing panel and interface may be cleaned with a moist cloth.

The flow transmitter should be checked to ensure that insects have not infested the housing. Insects can create short circuits in the electronics causing failure. If necessary a regular program for cleaning and/or spraying insecticide should be put in place.

Note:

Do not spray electronic circuit board with insecticide.

Sealing / Ingress Protection

The M500 is designed to be resistant to ingress of water and dust and features sealable glands on its base. Five glands exist in total, 1xM25, 1xM20, 3xM16. The M500 is shipped with cable glands which allow the cables to be inserted and wired into the unit whilst sealing.

Risk of Electrocution

The M500 is provided with gland plugs which enable sealing when cable is not fitted, also acting as an important safety measure. Installers must fit provided gland plugs to any unsealed cable glands. A potential electrocution risk may exist if any loose object penetrates an open gland in the base.

TROUBLESHOOTING GUIDE

The flow transmitter and flow detector have been tested in our flow laboratory prior to shipment. However if you do experience problems please note the serial number and reference number of the instrument prior to contacting either Aquamonix. The serial number may be found either on the flow detector at the point the cables enter, or on a label attached to the electronic board.

Display is Blank

Check that battery is charged and connected correctly.

Check that system is not in power save mode by pressing the tick button to turn the display on. If this fails reset the system by disconnecting battery and solar panel, waiting 30 seconds and then reconnecting, this will generate a self-test and auto calibration.

Display Is Erratic and Does Not Read Zero

Pipe may not be full of liquid. Ensure pipe is full. Check signal wiring. Increase smoothing setting (refer configuration).

No Response to Flow

Check all cabling. Check that pipe is full and there is flow. Check Diagnostic screen for reverse flow (negative voltage reading); reverse red and blue cores of flow signal cable at the terminal strip in the flow transmitter if necessary.

NOTES

NOTES

AQUAMONIX
Measure. Monitor. Master.

www.aquamonix.com.au **Ph: 1300 797 246**

New South Wales:
Ph: (02) 8710 4040
268 Milperra Rd,
Milperra, NSW 2214

Victoria:
Ph: (03) 5821 4044
19a New Dookie Rd,
Shepparton, VIC 3630

Western Australia:
Ph: (08) 9477 1188
1/30 Oxleigh Drive,
Malaga, WA 6090